R
916.6064
Off/off
80216

00080216

NOT TO BE ISSUED
OUT OF THE LIBRARY.

THE
ASIATIC SOCIETY OF BOMBAY
Town Hall, Bombay.

Digitized with financial assistance from the
Government of Maharashtra
on 21 October, 2015

# OFFICIAL

AND

# DESCRIPTIVE CATALOGUE

OF THE

80216
al

# MADRAS EXHIBITION

OF

# 1857.

ARCOT NORTHERN DIVISION.
ARCOT SOUTHERN DIVISION.
BANGALORE.
BELLARY.
CALCUTTA.
CEYLON.
CHINGLEPUT.
COCHIN.
COIMBATORE.
CUDDAPAH.
GANJAM.
GUNTOOR.
HYDERABAD.
KURNOOL.
MADRAS.
MADURA.
MALABAR.
MANGALORE.
MASULIPATAM.
MIDNAPORE.
NELLORE.
OOTACAMUND.
PALGHAUT.
PEGU.
PONDICHERRY.
POODOOCOTTAH.
RAJAHMUNDRY.
SALEM.
TANJORE.
TINNEVELLY.
TRANQUEBAR.
TRAVANCORE.
TRICHINOPOLY.
VELLORE.
VIZAGAPATAM.
VIZIANAGARUM.

R.
016.6064
off/off
80216

The Right Honorable the Governor of Madras in Council, in Extract Minutes of Consultation, dated 15th August 1855, appointed an Exhibition of the Raw Materials, of the Machinery and Manufactures, and of the Sculptures, Models and the Plastic Art, of the Madras Presidency and the neighboring States, to be held in the Banqueting Hall, Madras, 2nd February 1857 ; and, in order to make generally known the wishes of Government regarding it, and to draw up a scheme of all the minor and subsidiary arrangements for carrying it out, nominated the following gentlemen to form a Committee.

## GENERAL COMMITTEE.

*President.*

THE RIGHT HONORABLE LORD HARRIS.
W. A. MOREHEAD, ESQ.
W. U. ARBUTHNOT, ESQ.
A. HUNTER, ESQ., M. D.
EDWARD BALFOUR, ESQ., *Secretary.*
H. F. C. CLEGHORN, ESQ., M. D.
H. A. MURRAY, ESQ.
CAPTAIN J. W. HAY,
MAJOR J. MAITLAND,
THE HONORABLE W. ELLIOT, ESQ.
THE HONORABLE SIR H. C. MONTGOMERY, BART.
FINDLAY ANDERSON, ESQ.
LIEUT. COL. T. T. PEARS, C. B.
LIEUT. COL. G. BALFOUR, C. B.
LIEUT. COL. F. C. COTTON,
BINNY KEY, ESQ.
CAPTAIN W. S. JACOB.

## EXECUTIVE COMMITTEE.

THE RIGHT HONORABLE LORD HARRIS.
A. HUNTER, ESQ., M. D., *Director of Arrangements.*
EDWARD BALFOUR, ESQ., *Secretary.*
H. A. MURRAY, ESQ.
CAPTAIN J. W. HAY,
THE HONORABLE W. ELLIOT, ESQ.
THE HONORABLE SIR H. C. MONTGOMERY, BART.
LIEUT. COL. G. BALFOUR, C. B.

## SUB-COMMITTEE.

### FOR RAW PRODUCTS.

The Honorable Walter Elliot, Esq.
W. A. Morehead, Esq.
H. F. C. Cleghorn, Esq., m. d., *Secretary.*
Lieut. Col. G. Balfour, c. b.
Binny Key, Esq.
Lieut. Col. F. C. Cotton.

## SUB-COMMITTEE.

### FOR MACHINERY, MANUFACTURES, SCULPTURES, MODELS AND THE PLASTIC ART.

W. U. Arbuthnot, Esq., *Chairman.*
A. Hunter, Esq., m. d., *Secretary.*
Findday Anderson, Esq.
Major J. Maitland.
Lieut. Col. T. T. Pears, c. b.
Capt. W. S. Jacob.

## FINANCIAL SUB-COMMITTEE.

Lieut. Col. T. T. Pears, c. b.
Lieut. Col. G. Balfour, c. b.

## RECEIVING OFFICER.

Major P. T. Snow.

# NAMES OF EXHIBITORS.

## A.

Abdool Cauder, Chingleput.
Adalakum Chetty, Salem.
Adonie, Tashildar, Bellary.
Addis, W. J. Esq., Madras.
Aga Ismael Saib, Masulipatam.
Agi Mundee Saib, Masulipatam.
Agnew, Eliza Miss, Ceylon.
Ahobala Row, Tashildar, Bellary.
Alagheyanumbee, Tinnevelly.
Allaypah Naick, Madras.
Ambrose, Mr. George, 1st Class Foreman, Bangalore.
Anantha Chetty, Gold Smith, Malabar.
Anantapoor, Tashildar, Bellary.
Anem Ayennah, Weaver, Ganjam.
Anthony, P. Mr., Madras.
Anuntha Charry, Chingleput.
Anunthiyer Putter, Tahsildar of Cawaye, Malabar.
Appasawmy Moodelly, Chingleput.
Appavoo, Chingleput.
Appavoo, F. Botanical Assistant Medical College, Madras.
Armooga Konar, Palghaut.
Arnachellum Acharry, Salem.
Arnachellum, Tinnevelly.
Aroomooga Moodelly, Chingleput.
Aroonachella Chetty, Chingleput.
Aroonachellum Chetty, Madura.
Aroonagery Achary, Chingleput.
Arsenal Fort Saint George, Madras.
Arthanary Moodelly, Salem.
Ascpa Tatiah, Ganjam.
Ashton, Richardson & Co., Messrs. Madras.
Avery, E. Mr Inspector Electric Telegraph, Madras.

## B.

Balasawmy Chetty, Salem.
Balfour, Edward Esq., Madras.
Balmain, J. E. Major, Madras.
Banagana Pillay, Nawab, Kurnool.
Banoo Chetty, South Arcot,
Barnes, Apothecary, Bangalore.
Bassano, Mr. Tahsildar Wynaad, Malabar.
Basapha, C. Bellary.
Basavanah, P., Masulipatam.
Basawa, Potter in Adonie, Bellary.
Bates, W. Mr., Malabar.
Bava Saib, Chingleput.
Baullo Moodelliar, C. Madras.
Beauchamp, G. T. Esq., Tanjore.
Benson, Capt. Sub Asst. Commissary General, Moulmein, Madras.
Bhaarasawmy, B., Masulipatam.
Binny and Co., Messrs., Madras.
Binny and Co., Travancore.
Blackwell, J. H. Esq., Vizagapatam.
Boalth, W. Mr., Madras.
Brandis, Dr. Supt. of Forests in Pegu.
Brass, Mr. T., Chingleput.
Brown, Mrs., Cloud John Reid, Madras.
Browne, C. H. Esq., Calcutta.
Bundy Doss, Masulipatam.
Bunky Baupunnah, Rajahmundry.
Burgass, R. Esq., Madras.
Burmajee Row, Bangalore.
Bylimsaheb, Rajahmundry.

## C.

Cadavale Paroya, Masulipatam.
Cadell, W. M. Esq., Tanjore.
Calytheetha Moodely, Salem.
Callingal Choy Cootty Moopen, Malabar.
Campbell, T. H., Bangalore.
Cannan, Mr., Bangalore.
Candoo, Nair, Tahsildar of Coormenadd, Malabar.
Casavah Moodelliar C., Madras.
Caulapha, Bellary.
Cauder Saib, Chingleput.
Causaker, Mr., Salem.
Causy Rowt, Salem.
Cava Bapoo, Malabar.
Chalapoorata Eresha Menon, Tahsildar of Nedinganaad, Malabar.
Chalk, W. Sergeant, Madras.
Chamber of Commerce, Madras.

Chandoo, Nair, Tahsildar of Coormenadd, Malabar.
Chengelroya Chetty, South Arcot.
Chengunnah Sastry, G., Chingleput.
Chennajee Row, Bangalore.
Chingleput Reddy.
Chinniah Moodely, Salem.
Chocalingum, T., Madras.
Chockalinga Moodely, Salem.
Christian School Book Society in Southern India, Madras.
Clerk, Captain T., Bangalore.
Cleghorn, Dr. H. F. C., Madras.
Cleaves, Mr., Madras.
Coats, Major W., Bangalore.
Cochrane, W. E, Esq, Madras.
Coday Tooljah, Bangalore.
Collector of Malabar.
Coglan, Jeremiah, Gunner H. A., Bangalore.
Colundavaloo, Tinnevelly.
Comarasawmy Moodely, Chingleput.
Comarasawmy, Tinnevelly.
Comaravaloo Pillay, Travancore.
Condalamputty Chetty, Salem.
Conien Nair Tahsildar of Walloowanadd, Malabar.
Conniah Chettiar C. V., Madras.
Copoolak Seetiah, Naidoo, Masulipatam.
Cooliah Gounden, Salem.
Coomaravaloo P. Tanampett, Madras.
Coopchund, Madras.
Cooper, F. Esq., Vizagapatam.
Coopoo Gounden, Chingleput.
Coopoosawmy Iyer, Chingleput.
Cooppoo Moodely, Salem.
Cotton, J. J. Esq., Masulipatam.
Crowe, T. and Son, Madras.
Crozier, H. Esq., Nellore, Madras.
Cullamoottoo, Tinnevelly.
Cullen, General, Travancore.
Cundapa Naick, Chingleput.
Cundasawmy Moodely, Chingleput.

## D.

Daivanaigam Iyengar, Tinnevelly.
Dasen, Chingleput.
Dasigum Iyengar, Madras.
Davannun, Chingleput.
Davis, Captain, Hyderabad.
Davies, D. Mr., Madras.
Davood, Sub Overseer, Madras.
Day, Assistant Surgeon H. C. Hyderabad.
Deulson, C. A., Lieut. Col., Madras.
Deschamps, J. Mr., Madras.
Dhondala Esarsah, Bangalore.
Dhondajee Row, Bangalore.
Dickson, E. L. Esq., Madras.
Director of Artillery, St. Thomas' Mount.
D'Monte, F. M., Mr., South Arcot.
Doddapah Naick, Madura.
Dossanah, Bangalore.
Dowdeswell, W. Esq., Chingleput.
Drew, C. Assist. Surgeon, Madras.
Drury, H. Captain, Cochin.

## E.

Eagan, J. Mr., Bangalore.
Eratha Carebasapha Setty, Bellary.
Esmaiel Khan, Chingleput.

## F.

Fackrodeen, Bellary.
Fakeersah, Tanjore.
Fischer and Co., Messrs., Salem.
Fitzgerald, Mr., Chingleput.
Flynn, Dr. G. W., Madras.
Fraser, J. Esq., Masulipatam.

## G.

Ganapathy Sastry, Tinnevelly.
German, Mission at Mangalore.
Ghoolam Saib, Kurnool.
Ghoolam Kadr, Madras.
Ghoolam Mahomed, Madras.
Gibson, Mr. P., South Arcot.
Gilby, W. Captain, Travancore.
Gooilem, Tahsildar, Bellary.
Goondappa Row, Tanjore.
Gootto Cunniah, Ganjam.
Gopalacharry, N. C., Rajahmundry
Gopaul Madaven Congany, Goldsmith Quilon, Travancore.
Green, F. Mr., Malabar.
Griffiths and Co., Messrs., Madras.
Gungereddy Sutty, Rajahmundry.
Gunthorpe, J. A. Major, Masulipatam.

## H.

Hafiz Mahomed, Salem.
Haller, Mr. Manufacturer, Mangalore.
Harris, the Right Honorable, Lord; Madras.
Hawkes, H. P. Lieut. S. A.C. G. Madras.
Hawkins, F. N., Rajamundry.
Hayes, J. Sergeant, Madras.
Heeray Gounden, Salem.
Huffton, R. Apothecary, Salem.
Hunajee Row, Bangalore.
Hunoomajee Row, V., Masulipatam.

# NAMES OF EXHIBITORS.

Hunt, P. R. Mr., American Mission Press, Madras.
Hurry Row, R., Tanjore.
Hussajee Row, Bangalore.
Hutchinson, W. Lieut. Bellary.
Hyderabad Committee.

## I.

Iyapen Shan, Tinnevelly.
Iyasawmy Pillay, Chingleput.

## J.

Jaffer Saib, Masulipatam.
Jaffer Syed Cossim, Masulipatam.
Jaffrey, A. T. Mr., Madras.
Jesudasen, N. S. Dr., Madras.
Joalla Singh, Resident of Rawalpindee, Calcutta.
Jugganaikloo, Vasarootoo, Guntoor.
Juggenada Butten, Madras.

## K.

Kanagaroyen, Native Surgeon S.B., Coimbatore.
Kanoodekee Kumpiah, Bellary.
Kennedy, R. Esq. Asst. Civil Engineer, Madras.
Kirkpatrick, J. Dr. M. D., Bangalore.
Kistnen, Chingleput.
Kistna Row, T., Tanjore.
Kistnapah Naick, Tanjore.
Kistnasawmy G. M., Chettiar, Madras.
Kistniah, Native Maramut Superintendent, Coimbatore.
Kistnamah Moochy, Masulipatam.
Kohlhoff, W. D. Esq., Tanjore.
Komareck, W. Mr, Madras.
Komareck, Mrs., Madras.
Koodlaghee, Tahsildar, Bellary.
Koosoonoo Patnaikoodoo Carver, Ganjam.
Krishna Menon, Tahsildar of Chowghat, Malabar.
Kristna Chettiar, Palghaut.
Kristnama Charry, Chingleput.
Kristnasawmy Iyengar, Bangalore.
Kristniah, North Arcot.
Kristniah, Bangalore.
Kristno Row, T., Travancore.

## L.

Latham, George Esq., Madras.
Lazar, Stephen Esq., Madras.
Lecot, Edward Esq., Madras.
Letchoomana Chetty, Madura.
Levinge, J. H. Esq., Sub Collector, Tinnevelly, Madras.
Little, C. R. Revd., Madura.
Loarer, Edward Mr., Madras.
Local Committee, North Arcot.
Local Committee, South Arcot.
Local Committee, Bellary.
Local Committee, Chingleput.
Local Committee, Guntoor.
Local Committee, Coimbatoor.
Local Committee, Bangalore.
Local Committee, Cochin.
Local Committee, Hyderabad.
Local Committee, Kurnool.
Local Committee, Madras.
Local Committee, Masulipatam.
Local Committee, Nellore.
Local Committee, Rajahmundry.
Local Committee, Salem.
Local Committee, Trichinopoly.
Local Committee, Travancore.
Lowry, Mr., Bangalore.
Lutchman Moockee, Rajahmundry.
Lutchmana Row, Tanjore.
Lutchmaacing, Palghaut.
Lutchmen Row, Bangalore.

## M.

Macdonald, W. P., Lieut. Colonel, Madras.
Maclagan, J. T. Esq., Madras.
Madasawmy, Tinnevelly.
Madavarow, T., Travancore.
Madras School of Industrial Arts.
Madras Government.
Maharaja Pillay, Tinnevelly.
Mainy, Malabar.
Maitland, C. W. Mr., Tanjore.
Maltby, N. C., Esq., Hyderabad.
Manjoo Comaty, Huzzoor Moonshee, Malabar.
Mareapathen, Tinnevelly.
Martin, Mr. P., South Arcot.
Masum Saib, Kurnool.
McCally, Lieut. Col., Madras.
McMaster, Bryce Esq., Madras.
Meah Saib, Meeranjee, Tinnevelly.
Meer Mahomed, Salem.
Meera Pilla Lubbay, Chingleput.
McIvor, W. G. Mr., Supt. Govt. Gardens, Ootacamund.
Military Board, Madras.
Mission Boarding School, Ceylon
Mission Industrial School, Salem.
Moberly, Lieut., A. S., Madras.
Modeen Saib, Tanjore.
Molyneux, Mrs., Rangoon.
Moncrieff, F. L., Rajahmundry.
Mookoondoo Jumpa, Masulipatam.
Mooneappa Chetty, Chingleput.

Moonesah, Chingleput.
Moondroomoogamcondan, Tinnevelly.
Mooneyapah, Bellary.
Moonesawmy Chetty, Chingleput.
Mooragasem Moodelly, Madras.
Moore, R. A. Lieut., Masulipatam.
Mootoosawmy Moodely, South Arcot.
Mootoosawmy Naick, Chingleput.
Moothun, Chingleput.
Mootoosawmy, Weaver, Tinnevelly.
Moottumbalavanum, Tinnevelly.
Moottoosawmy Pillay, Travancore.
Mosunkan Jemadar, Kurnool.
Muddin Hunnooma of Bhunnoo Raichore Doab, Hyderabad.
Mullappa, Bellary.
Mukjee Nunjapha, Bangalore.
Mukjee Tookaram, Bangalore.
Murry, M. Esq., Cuddapah.

## N.

Nagabhooshanum, K., Masulipatam.
Naganah Bommadavara Rajah, Masulipatam.
Nagandra Chetty, C., Salem.
Nagojee, Bellary.
Nagojee, Bangalore.
Namussevoy Mogunty, Rajahmundry.
Nanooviah, Weaver, Palghaut.
Narain Chetty, Chingleput.
Narainasawmy Chetty, G., Chingleput.
Narrainsawmy, C., Rajahmundry.
Narasinga Row, Madura.
Narasimloo Chetty, V. Madras.
Narasiah Chetty Raja, Salem.
Narasimma Naick, Chingleput.
Narasimma, Chingleput.
Narayana Naick, Chingleput.
Narayen Dajee, Graduate of the Medical College, Madras.
Narrappa, G., Bellary.
Narsingum Midda, Masulipatam.
Nash, J. P. Esq., M. D. Madras.
Nathunna Chetty, Salem.
Native Female Central School, Madras.
Nawab Oomdeetoolmoolk, Bahadoor, Hyderabad.
Neer, Dowlaishiveram, Madras.
Newlyn, D. A. C. Capt. Genl., Madras.
Nickle, R. W. D. Capt., Madras.
Nullama..., Tinnevelly.
Nullan von Pillay, Tinnevelly.
Nullatha Moodelly, Chingleput.
Nummiah Naidoo, S. Masulipatam.
Nurscreddy Sutty, Rajamundry.
Nursigandoo and P. Gotadoo, Masulipatam.
Nursimah Iyengar, Head Sheristadar, Bangalore.
Nynatha Moodelly, Chingleput.

## O.

Oakes and Co., Messrs., Madras.
Oosman Khan, Chingleput.
Ootoocathan, Chingleput.
Orr, P. Messrs. and Co., Madras.
Oswald, W. R. Assist. Surgeon M. D. Madras.

## P.

Palavasum, Tinnevelly.
Palmer, Capt., Hyderabad.
Parayiah Goroo, Rajahmundry.
Parker, D. Esq., Palghaut.
Parker, R. D. Esq., Collector, Madura.
Parthasarady Naidoo, P., Masulipatam.
Patchayappa Moodely, Chingleput.
Paupanah Thalethala, Masulipatam.
Paupiah, Head Shroff, Lingamulloo, Guntoor.
Pavanum Paly, Malabar.
Peer Saib, Tanjore.
Pelly, C. R. Esq., Rajahmundry.
Pelly, C. R. Esq., Rajahmundry, Madras.
Penoogondah, Tahsildar, Bellary.
Penpy Reddy, Chingleput.
Pereira, Miss, Chittore, Madras.
Peter Orr, Mr., Madras.
Pitcheka Moosalee, Masulipatam.
Pichen, Tinnevelly.
Plebst, G. Mr., Madras.
Polesetty Pitcheka, Rajahmundry.
Poonnajee Row, Bangalore.
Ponnun, Chingleput.
Porteous, H. W. Esq., Madras.
Power, Rowden Esq., Ceylon.
Powys, R. H. Esq., Madras.
Pradhomime, A. Esq., Tanjore.
Proboo, P. Mr., Mangalore.
Proudfoot George, Mr., Madras.
Puckle, Lieut., Bangalore.
Punchapalem, Tahsildar, Bellary.
Purvatauloo Bullah, Rajahmundry.
Purvis, A. Esq., Rajahmundry.
Puttanah Moochy, C., Masulipatam.

## Q.

Quicklee, M. Miss, Madras.
Quicklee, J. Mr., Madras.

## R.

Ragava Naick, Chingleput.
Ragava Charry, Chingleput.

Ragavaloo Chetty, South Arcot.
Ragaviengar, Chingleput.
Rajunnen, Chingleput.
Ram Row, Goomastah, Bellary.
Ramachundra Tondinean Bahaudoor Rajah Poodoo Cottah,
Ramah Vurmah, 3rd Prince of Travancore.
Ramanatha Moodelly, Chingleput.
Ramanuja Iyengar, Chingleput.
Ramakrishna Iyer, Chingleput.
Ramannah, E. Rajahmundry.
Ramasawmy, Chingleput.
Ramasawmy Goodoor, Kurnool.
Ramasawmy Sowcar, Kurnool.
Ramasawmy, Gauroo, Masulipatam.
Ramasawmy, Salem.
Ramasawmy Chetty, Dubash to Messrs Walker and Co., Madras.
Ramen, Tinnevelly.
Rameredy Sutty, Rajahmundry.
Ramiah, G. Gauroo, Masulipatam.
Ramoo Pillay, Tanjore.
Ramoony Marar, Malabar.
Ramoony Panikar, Malabar.
Ramun, Chingleput.
Ratton, J. Assistant Surgeon, Chingleput.
Rawdon Power, E. Esq., Ceylon.
Rawlinson, C. S. the Honor., Madras.
Rayappa Pillay Nazareth, Madras.
Reid, Mr., Overseer, Coimbatoor.
Resident of Hyderabad, Hyderabad.
Revenue Board, Madras.
Reynolds, W. Foreman, Madras.
Riddell, R. Esq., Madras.
Riddell, Dr., Hyderabad.
Riddell, Dr. Poona, Madras.
Roberts, Lieut., A. R., Madras.
Robinson, B. Foreman, Madras.
Rohde, J. Esq., M. D. S. Madras.
Rohde, J. Esq., Madras.
Ross, B. Mr., Madras.
Ross, D. Esq., Ootacamund.
Roupell, J. B. Esq., Civil and Session Judge of Coimbatoor.
Rozario, Mr., Tahsildar of Cherical, Malabar.
Rungasawmy Moodelly, Chingleput.
Rungappa Chetty, Chingleput.
Runga Charloo, C., Chingleput.
Rungiah Naidoo Paulavany, Madras.
Russell, J. G. Captain, Kurnool.

## S.

Sabapathy, Chingleput.
Sabaputty Moodely, Salem.
Sackeree Curdappa, Bellary.
Salar Saib, Chingleput.
Saka Row, Bangalore.
Samoovien, Tinnevelly.
Sashachellum, Chingleput.
Sashdry Iyengar, Chingleput,
Sashegherry Row, P., Salem.
Sashiah Gauroo, A. Masulipatam.
Sashoy Chetty, C., Salem.
Savoogun Chetty, Madura.
Sawmy Chetty, T., Madras.
Sawmy, Tinnevelly.
Sawmynadah Moodely, C., Travancore.
Scriven, G. & Co., Messrs., Madras.
Sedashia, Vizagapatam.
Sergent, London Mission, Mrs. Bangalore.
Sevarama Iyer, Palghaut.
Sevasoobramoneyen, Tinnevelly.
Sewell, Mrs., Bangalore.
Shaw, Messrs. & Co., Madras.
Shungoong Menoven, P., Travancore.
Skinner, T. W., Sub Conductor, Madras.
Simeon, Mr. Charles, Madras.
Simpson, Lieut., Bangalore.
Simpson & Co. Messrs., Madras.
Smith, H. H. Mr., *Supt. Madras Railway Company*, Palghaut.
Smith, Dr., Hyderabad,
Sneliksz, Mr., Malabar.
Snow, P. T. *Major, Madras.*
Sodalamootoo Pillay, Tinnevelly.
Somoosoonthrum Chettiar, P., Madras.
Sooba Row, Bangalore.
Soobba Chetty, Catha, Salem.
Sooben, Tinnevelly.
Soobiah V., Silver Smith, Masulipatam.
Soobbier, Chingleput.
Soobbareddy, Cavoory, Rajahmundry.
Soobaroya, Chetty, P. Salem.
Soobbroya Chetty, Andee, Salem.
Soobaroyer Mecras, Tinnevelly.
Soobroya Gounden, Chingleput.
Soobromoneya Pillay, Tinnevelly.
Soobroyaloo Chettiar Gopoo, Tanjore.
Soobbunnah Condah, Rajahmundry.
Soobramanea Achary, Chingleput.
Soodalamootoo, Tinnevelly.
Soondara Moodely, Salem.
Soondarier, Chingleput.
Stevenson, George, Sub Conductor, Madras.
Streenevasa Iyengar V., Chingleput.
Streenevasa Vardachary, Chingleput.
Streenevasa Chetty, Salem.
Streenevasooloo C. Naidoo, Madras.
Streevencatasem Chetty, Manager, Madras.
Sun[illegible]bien, Tinnevelly.
Sunkaralingum, Tinnevelly.

Sutteanatha Butten, Chingleput.
Syed Hoosain, Masulipatam.
Syed Hoossain, Bellary.

## T.

Tachava Kavil Tiroomelpoo, Malabar.
Tanctial Unkum, Rajahmundry.
Tandroyen, Chingleput.
Tandavamoorty Moodelly, Chingleput.
Tantical Janal, Rajahmundry.
Tahsildar, Bellary.
Tawse, John Esq., Madras.
Tayen Papiah, Ganjam.
Taylor, Captain M., Hyderabad.
Taylor, Thomas Quarter Master Sergeant, Body Guard.
Teroomala Gounden and Palany Gounden, Salem.
Teroovangada Moodelly, Chingleput.
Teroovengada Odian, Salem.
Teroovangadum, Tinnevelly.
Thavasia Pillay, Tanjore.
Thayoomana Pillay, Trichinopoly.
Thomas, E. B. Esq., Collector, Coimbatoor.
Thunnajee Row, Bangalore.
Thurmalingapathen, Tinnevelly.
Thurmapermal Pillay, Tinnevelly.
Tolputt, H. Esq., Madras.
Tondavaroya Moodelly, Chingleput.
Tondroy Naik, Salem.

## U.

Underwood, W. E. Esq., Madras.

## V.

Vagoo Survasa, Masulipatam.
Valayootha Moodelly, Chingleput.
Valum Chetty, Tinnevelly.
Vasarowtoo, Vencatacroostnodoo, Punen Chena Ramasawmy, Guntoor.
Vasudavoo, T., Madras.
Vathachella Moodelly, Chingleput.
Veedpodagum, Madura.
Veerabhadroodoo, C., Rajahmundry.
Veerabudra Chetty, Salem.
Veerasalingum Moochy, D., Masulipatam.
Veerasawmy Moodelly, Chingleput.
Veerasawmy Reddy, Chingleput.
Veerasawmy Chingleput.
Veerasawmy Iyengar, Chingleput.
Veerasawmy, Havildar F Company 12th N. I., Madras.
Veerasawmy Naick, Trichinopoly.
Veerasawmy Moodelly, Palghaut
Vellore Arsenal Workmen, Vellore.
Vencata Reddy, Chingleput.
Vencata Narsinga Row, D. Masulipatam.
Vencata Reddy, M., Masulipatam.
Vencata Reddy, Masulipatam.
Vencata Row, V. Puntooloo, Masulipatam.
Vencata Narsingrow, Tahsildar Teroor Talook, Masulipatam, Madras.
Vencatachella Pillay, Chingleput.
Vencatachella Moodelly, Chingleput.
Vencatachella Naick, Chingleput.
Vencatachellapatty Andeé, Salem.
Vencatachellum, Bellary.
Vencatanurasinga Row V., Masulipatam.
Vencatarama Pundit, Chingleput.
Vencatarama Chetty, Chingleput.
Vencatrama Chetty, P., Salem.
Venkatarow, Hyderabad Dewan, Kurnool.
Venkojee Row, Bangalore.
Venkossee Zeengur, Kurnool.
Venkoovier, Chingleput.
Vengal Reddy, B., Cuddapah.
Vizianagram Rajah, Vizianagram.
Voodappah Naick, Madura.
Vurdappa Chetty, Chingleput.
Vureamoorthy Chettiar and Sooboo Chettiar, Madras.
Vuttathamarah Pisin, Travancore.

## W.

Walker and Co., Messrs, Madras.
Walter Elliot, The Honorable Esq., Madras,
Waring, E. G. Asst. Surgeon, Travancbre.
Waters, W. Mr., Madras.
Western, James, V. S. H. A., Bangalore.
William Hilbers, Dr., Bangalore.
William Haydon, Madras.
Williams, G. Mr., Madras.
Williams, G. Assistant Surgeon St. M. D, Madras.
Wilkieson, Lieut, Bangalore.
Wijoonan, Chingleput.
Whistler, J. Lieut. Col., Madras.
Wright, W. B. Esq., Madras.
Wrightman, G. Apothecary, Bangalore and Madras.

## X.

Xavier, Mr., Bangalore.

## Y.

Yacambarum, C. Iyer., Madras,
Yanadies, Chingleput.
Young, H. Esq., Nellore

# PONDICHERRY.

## NAMES OF EXHIBITORS.

M. M. Angede Babick, Regt. Exhibitor.
" Balakishna Parassurama and Co. Exhibitors.
" Bulliards Exhibitors
" Carriol Exhibitors.
" Ogilas Exhibitors.
" Local Committee Exhibitors.
" Dotermes, Exhibitor.
" Erny Exhibitor.
" Pilatrian Exhibitor.
" Geruzete Exhibitor.
" Godefroy Exhibitor.
" Louis Guerre Exhibitor.
" Magry Exhibitor.
" T. Le. Sittier.
" Perrottet Exhibitor.
" Parassourama Chettiar, Exhibitor.
" Poulli Appavoo Moodeliar, Exhibitor.
" De Querret Exhibitor.
" Rungasawmy Moodely, Exhibitor.
" Sooberoya Poulli, Exhibitor.
" O. Soupouroyapoulle, Exhibitor.
" Cardivel Exhibitor.

CONSECUTIVE Nos AS ASSIGNED TO ARTICLES FROM EACH DISTRICT.

| Pro. Nos. From | Pro. Nos. To | Names of Places. | Pro. Nos. From | Pro. Nos. To | Names of Places. |
|---|---|---|---|---|---|
| 1 | 100 | Kurnool. | 6864 | 6957 | Cochin. |
| 101 | 169 | Tinnevelley. | 6958 | 6966 | Tranqubar. |
| 170 | 190 | Trichinopoly. | 6967 | 7157 | Mangalore. |
| 191 | 486 | Paulghaut. | 7158 | 7328 | Pondicherry. |
| 487 | 814 | Chingleput. | 7329 | 8000 | Madras. |
| 815 | 1121 | Vizianagrum. | 8001 | 8003 | Hyderabad. |
| 1122 | 1132 | North Arcot. | 8004 | 8055 | Chingleput. |
| 1133 | 1334 | Madura. | 8056 | 8263 | Kurnool. |
| 1335 | 1957 | Bellary. | 8264 | 8300 | Ootacamund. |
| 1958 | 2004 | Bangalore, or Mysore. | 8301 | 8306 | South Arcot. |
| 2005 | 2073 | Bellary. | 8307 | 8320 | Rajahmundry. |
| 2074 | 2319 | Nellore. | 8321 | 8388 | Hyderabad. |
| 2320 | 2329 | Ceylon. | 8389 | 8404 | Nellore. |
| 2330 | 2334 | Paulghaut. | 8405 | 8414 | Mirzapore or Calcutta. |
| 2335 | 2370 | Guntoor. | 8415 | 8433 | Rajahmundry. |
| 2371 | 2528 | Salem. | 8434 | 8435 | Chingleput. |
| 2529 | 2641 | Cuddapah. | 8436 | 8700 | Madras. |
| 2642 | 2928 | Malabar. | 8701 | 8709 | Chingleput. |
| 2929 | 3127 | Coimbatore. | 8710 | 8800 | Madras. |
| 3128 | 3674 | Travancore. | 8801 | 8843 | Vizagapatam. |
| 3675 | 3800 | Bellary. | 8844 | 8853 | Masulipatam. |
| 3801 | 3803 | Travancore. | 8854 | 8866 | Vellore. |
| 3804 | 3923 | Rajahmundry. | 8867 | 8900 | Madras. |
| 3924 | 4188 | Masulipatam. | 8901 | 9027 | Pegue. |
| 4189 | 4278 | Bangalore. | 9028 | ,, | Chingleput. |
| 4279 | ,, | Travancore. | 9029 | 9100 | Madras. |
| 4280 | 4732 | Tanjore. | 9101 | 9177 | South Arcot. |
| 4733 | 4747 | North Arcot. | 9178 | 9239 | Poodoocottah. |
| 4748 | 5076 | Madras. | 9240 | 9272 | Cuddapah. |
| 5077 | 5193½ | Tanjore. | 9273 | 9286 | Pondicherry. |
| 5194 | 5260 | Vellore. | 9287 | 9300 | Bangalore. |
| 5261 | 5291 | North Arcot. | 9301 | 9310 | Madras. |
| 5292 | 5307 | Ceylon. | 9311 | 9313 | Bangalore. |
| 5308 | 5359 | Chingleput. | 9314 | 9324 | Hyderabad. |
| 5360 | 6000 | Madras. | 9325 | 9326 | Calcutta. |
| 6001 | 6736 | Hyderabad. | 9327 | ,, | Hyderabad Assigned District Rachore Doab. |
| 6737 | 6820 | Bangalore. | | | |
| 6821 | 6846 | Trichinopoly. | | | |
| 6847 | 6863 | Salem. | | | |

## ARCOT—NORTHERN DIVISION.

### Local Committee Exhibitors.

| | | |
|---|---|---|
| 1122 | Silver lace cloth called Munthanpee ... ... | Rs. 15-8. |
| 1123 | Silver laced called Monthaper Mundib .. .. | Rs. 4-8. |
| 1124 | Silver laced cloth called Karchober Mundib .. | Rs. 2-2. |
| 1125 | Silver laced broad tape called Karchoopee Surponch | Rs. 4-6. |
| 1126 | Silver laced tape called Kinnaree Rooppoich ... | Rs. 2-12. |
| 1127 | Silver laced tape called Kinnaree Thooyoree Moodechoor... ... ... .. ... | Rs. 2-4. |
| 1128 | Silver laced Cloth called Thoortovun Pulla Karchobee Bootta ... ... ... .. | Rs. 9. |
| 1129 | Siver laced Cloth called Pulloo . .. | Rs. 8. |
| 1130 | Silver laced Cloth called Pulloo 3rd sort ... | Rs. 1-5. |
| 1131 | Silver laced narrow tapes called Nakee each priced at | 8 As. |
| 1132 | Stones for grinding sandal ... .. ... | As. 2. |

### Kristniah, Exhibitor.

| | | |
|---|---|---|
| 1133 | Carpet ... .. ... .. | Rs. 10-8. |

### Potteries.

| | | | |
|---|---|---|---|
| 4734 | Flower pot pipe clay | .. ... ... | As. 12. |
| 4734 | do do | ... .. .. | As. 12. |
| 4735 | do do | .. ... ... | As. 12. |
| 4736 | Butter Pot do | ... ... .. | As. 4. |
| 4737 | do do | ... .. ... | As. 4. |
| 4738 | do do | ... .. ... | As. 4. |
| 4739 | do do | ... .. .. | As. 4. |
| 4740 | do Goglets | ... .. ... | As. 2. |
| 4741 | do do | ... ... .. | As. 2. |
| 4742 | do do | .. ... .. | As. 2. |
| 4743 | do do | ... ... ... | As. 2. |
| 4744 | do do | ... ... .. | As. 2. |
| 4745 | do do | ... ... ... | As. 2. |
| 4746 | Sawny stones. | | |

## Chengelroya Chetty, Exhibitor.

9101 Check measuring 12 by 1¼ Rs. 2-4
9102 Do. do. Rs. 2-4.
9103 Do. do. Rs. 2-4.
9104 Do. do. Rs. 2-4.
9105 Do. do. Rs. 3.
9106 Gown cloth measuring 12 by 1¾ Rs. 2-8.
9107 Do. do. Rs. 2-8.
9108 Do. do. Rs. 2-8.
9109 Do. do. Rs. 2-8.
9110 Do. do. Rs 2-8.
9111 Do. do. Rs. 2-8.
9112 Do. do. Rs. 28.
9113 Long drawers cloth Measuring 14 by 2 Rs. 2-10.
9114 Do. do. Rs. 2-10.
9115 Do. do. Rs. 2-10.
9116 Do. do. Rs. 2-10.
9117 Do. do. Rs. 2-10.
9118 Cambagonus do 10 by 1¼ Rs. 4.
9119 Do. do. Rs. 3-8.
9120 Do. measuring 4½ by 2½ Rs. 2-8.
9121 Damask Napkins Rs. 3.
9122 Napkins Rs. 2-8.
9123 Towels Rs. 4-8.
9124 Bathing do. Rs. 5.

## Mr. P. Gibson, Exhibitor.

9125 Collar As. 12.
9126 Do. As. 12.
9127 Do. As. 12.
9128 Do. As. 8.
9129 Do. As. 8.
9130 Do. As. 8.
9131 Do. As. 8.
9132 Dorler As. 8.
9133 Do. As. 4.
9134 Do. As. 4.
9135 Do. As. 4.
9136 Do. As 4.
9137 Do. As. 2.
9138 Toilet glass corne Rs. 1-8.

## Mr. P. Martin, Exhibitor.

9139 Handkerchieves Rs. 1-14.
9140 Purple Check Rs. 6.
9141 Black Plaid Rs. 6-2.

## Mr F. M. D'monte, Exhibitor.

9142 Illustrated drawing of the Temple of Serangum Rs. 10.

## Local Committee, Exhibitor.

9143 Rugs Made of cocoanut fibre Rs. 1-10
9144 Fans made of Palmyrah leaf and painted Rs. 2-8.
9145 Bangles made of Lac and Mineral Sand Rs. 2.
9146 Dyed Sheep Skins Rs. 9.
9147 Strow work Baskets As. 12.

## Ragavaloo Chetty, Exhibitor.

9148 Damask Table cloth measuring 12 feet square Rs. 14 8.
9149 Do. do. measuring 12 feet long and 7 broad Rs. 8.
9150 Do. do. measuring 8 feet long and 6¾ broad Rs. 11-8.
9151 Do. do. measuring 7½ feet square Rs. 12.
9152 Table cloth measuring 18 feet long and 7 broad Rs. 19-4.
9153 Napkins Rs. 4-4.
9154 Do. Rs. 4-8.
9155 Do. Rs. 38.
9156 Check Rs. 3.
9157 Do. Rs. 2-8.
9158 Do. Rs. 2-8.
9159 Printed Palampore measuring 2-8.
9160 Cubits long and 5 broad Rs. 6-12.

## Banoo Chetty, Exhibitor.

9161 Printed Palampore measuring 9 x cubits 6¼ Rs. 13.
9162 Do. do. measuring 7 x 5 Rs. 8.
9163 Damask Table cloth measuring 8. Feet square Rs. 11-8.
9164 Do. do. 9 Feet square Rs. 15 8.
9165 Do. measuring 8 Feet x 7 Rs. 10 8.
9165½ Damask Table cloth measuring 6½ Feet square Rs. 8.

9166 Table cloth 7 Feet square Rs. 4
9167 Damask Napkins Rs. 3-8.
9168 Do. do. Rs. 3-8.
9169 Do. do. Rs. 3.
9170 Do. do. Rs. 3.
9171 Napkins Rs. 2-4.
9172 Towels Rs. 4-8.
9173 Table Cloth measuring 12 Feet x 8 Rs. 7-8.

S. Mootoosawmy Moodely, Exhibitor.

9174 Dry leaf Indigo Rs. 1-4.
9175 Green leaf Indigo.
9176 Two Tigers skins.
9177 Six Cheeta skins.

S. B. Kristnasawmy Iyengar, Exhibitor.

1958 Painted figures of animals Rs. 13.
1959 Lackered Toys Rs. 1.
1960 Rolls of steel wire Rs. 1.

---

Captain T. Clerk, Exhibitor.

1961 Woollen Carpet Rs. 1-10.
1962 Do do Rs. 1-10.
1963 White Cumbly Rs. 10-6.
1964 Grey do Rs. 10-6.
1965 Black do Rs. 10-6.
1966 Superior Cloth Rs. 1-14.
1967 Coarse do Rs. 1-5.
1968 Pair of Cloth (Dhotra) Rs. 3-6.
1969 Women Cloth (good) Rs. 2.
1970 Do do (coarse) Rs. 15-3.
1971 Aloe Fibre.
1972 Red Cumbly Rs. 1-11.
1973 White do Rs. 1-4.
1974 Do do Rs. 3.
1975 Do Cloth Rs. 2-4-8.
1976 Silk Thread (24 Rs. weights) Rs. 2-4
1977 Chintz Rs. 14.
1978 Turband Rs. 1-8.
1979 Green Shalnamah Rs. 2-4.
1980 Blue do Rs. 1-8.
1981 Sky do Rs. 2-4.

---

Dossanah, Exhibitor.

1982 Silver lace (Weighing Rs. 29½ Rs. 55-5.
1983 Gold lace (weighing Rupees 23¼) Rs. 81-6.
1984 Do Tape or (Minchputty) weighing Annas 11) Rs. 1-6.

---

Captain T. Clerk, Exhibitor.

1985 Grass Mats.

---

Lieutenant Simpson, Exhibitor.

1986 Box of Specimen of woods.
1987 Do do do.

---

Major W. Coats, Exhibitor,

1988 Canister Arrow Root (weighing 11 lbs, Rs. 11.

Dr. J. Kirkpatrick, M. D., Exhibitor.

1989 Box of Country Medicines.

---

2nd Apothecary G. Wrightman, Exhibitor.

1990 Bottle Puplichackay.
1991 Do Capala Rung.

---

Dr. J. Kirkpatrick, M. D., Exhibitor.

1992 Box of Country Medicines.
1993 Do of Clay, Stones, Bricks &c.
1994 Bundles of Fibres of Different kinds.
1995 Do of Strings of do.

---

Dr. William Hilbers, Exhibitor.

1996 A Meridian Sun, Dial with Magnetic Needle.
1997 A Modification of Davills Battery
1998 Hyosciamus extract leaves, seeds.
1999 A Forge bellows.
2000 A Frame work of Photagraphic Lent camera.
2001 Two long augurs made from steel Ramrods.
2002 An electro galvanic chain.
2003 A New Muster Venitian blind.
2004 An electro plated common hospital pewter Springe.

---

Mrs. Sargent, London Mission, Exhibitor.

4189 Anti Macassar Rs. 7.
4190 Do do Rs. 4.
4191 Collar Rs. 4.
4192 Do do Rs. 4.
4193 Boys Collar Rs. 1.
4194 4¾ Yards of Edging Rs. 3.

---

Thunnajee Row, Exhibitor.

4195 Gold lace worked Shamianah Rs. 1900.
4196 Do Turband Rs. 30.
4197 Do do Rs. 25.

---

Head Sheristadar Nursimah Iyengar, Exhibitor.

4198 53 Pieces of Different sorts of woods.

2nd Apothecary G. Wrightman, Exhibitor.

4199 Bottle of Gamboge.
4200 Bottle of Butter of Gamboge.

---

Sooba Row, Exhibitor.

4201 Gold Embroidered Table Cloth Rs. 350.

---

Venkojee Row, Exhibitor.

4202 Gold Palenkeen cover with three curtains Rs. 1800.

---

Kristniah, Exhibitor.

4203 Musnud with three Pillows Rs. 1300

---

Chennajee Row, Exhibitor.

4204 Elephant head dress Rs. 125.

---

Kristniah, Exhibitor.

4205 Elephant Jhool Rs. 3500.

---

Hussajee Row, Exhibitor.

4206 Curtain Rs. 200.

---

Sooba Row, Exhibitor.

4207 Saddle Cloth Rs. 150.

---

Burmajee Row, Exhibitor.

4208 Cushion with three Pillows Rs. 400

---

Chennajee Row, Exhibitor.

4209 "Val Pavadey" Pair Rs. 400.

---

Venkojee Row, Exhibitor.

4210 Chutree Rs. 225.

Saka Row, Exhibitor.

4211 Portrait of Mysore Rajah Rs. 175.
4212 Pair of Cushions Rs. 40.
4213 Pair of Thusthan Rs. 40.
4214 Gold Embroiderd cap Rs. 23.
4216 Do ds Blue cap Rs. 20.

---

Coday Tooljah, Exhibitor.

4216 Silk Quilt Rs. 75.
4217 Large Silk Shawl Rs. 125.

---

Mukjee Nunjapha, Exhibitor.

4218 Silk Quilt Rs. 100.
4219 Large Silk Shawl Rs. 125.
4220 Yellow Silk Table cover Rs. 50
4221 Apron Rs. 10.

---

Mukjee Tookaram, Exhibitor.

4222 Silk Quilt Rs. 80.
4223 Large Silk Shawl Rs. 115.

---

Dhondala Esorsah, Exhibitor.

4224 Silk Quilt Rs. 100.
4225 Large Silk Shawl Rs. 120.

---

Chennajee Row, Exhibitor.

4226 Small EmbroideredUmbrella Rs 100

---

Venkojee Row, Exhibitor.

4227 Sooreapan with gilt top Rs. 300.

---

Chennajee Row, Exhibitor.

4228 Horse saddle with a Gilt head Piece (Small) Rs. 200.

---

Sooba Row, Exhibitor.

4229 Dogs Jhool Rs. 50.
4230 Elephant saddle with a gilt head Piece (Large) Rs. 300.

Chennajee Row, Exhibitor.

4231 Charjama Rs. 60.
4232 Toy dress Rs. 15.

Dhondajee Row; Exhibitor.

4233 Lace Embroidered Fan Rs. 21.

Mukjee Nunjaph, Exhibitor.

4234 Silk Check dress Rs. 9.

Mukjee Tookaram, Exhibitor.

4235 Three Silk Check dress 9 Rs. each Rs. 27.

Coday Tooljah, Exhibitor.

4236 Five Silk Check dress 9 Rs. each Rs. 45.
4237 Two Plain Silk dress 8 Rs. each Rs. 16.

Dhondalay Esorsah, Exhibitor.

4238 Silk Check dress Rs. 9.
4239 Four Plain Silk Dress 8 Rs. each Rs. 32.
4240 Silk and cotton dress Rs. 6.

Mr. Xavier, Exhibitor.

4241 Silk Cloth (weight 46 Rs.) Rs. 18-6.
4242 Seer of white Silk Thread Rs. 4-2-9.
4243 Seer of Yellow do Rs. 4-11.
4244 Do of Green do Rs. 5-9-3.
4245 Do of Black do Rs. 5-6.
4246 Do of Red do Rs. 5 3 6.
4247 Do of Purple do Rs. 5-7.
4248 Do of Rose do Rs. 6-2.

Mr. Cannan, Exhibitor.

4249 Packet of Coffee.
4250 Do of do

S. B. Kristnasawmy Jyengar, Exhibitor.

4251 Complete set of Children Toys Rs. 5.

Mr. Lowry, Exhibitor.

4252 Bottle Sandal attar.

S. B. Kristnasawmy Jyengar, Exhibitor

4253 Sorts of Grains seeds Gums stones asper list.
4254 Angil wood log Rs. 2-8.
4255 Punneer wood log Rs. 2-8.
4256 Large White Cumbly Rs. 35.
4257 Do Black do Rs. 26.
4258 Chempaca wood log.

Thunnajee Row, Exhibitor.

4259 Bending sword Rs. 30.
4260 Guzarat do Rs. 35.

Lutchmen Row, Exhibitor.

4261 Elephant Jhool Rs. 2500.

Mrs. Sewell, Exhibitor.

4262 Box of Crochet works.

Mr. J. Eagan, Exhibitor.

4263 Pack of Boots,&c.

2nd Apothecary G. Wrightman, Exhibitor.

4264 Pack of Peacocks tail feathers.

Mukjee Nunjapah, Exhibitor.

4265 Square Red Silk Shawl Rs. 30.
4266 Do Figured do Rs. 35.
4267 Do White do Rs. 25.
4268 Check Silk dress Rs. 9.

Coday Tooljah, Exhibitor.

4269 Square Figured Silk Shawl Rs. 30.
4270 Tartan Silk Dress Rs. 8.
4271 Green Shot Silk Dress Rs. 7-8.
4272 Check Silk Dress Rs. 8.
4273 Red Silk Scarf Rs. 12.

Thoudalay Esarsah, Exhibitor.

4274 Square Red Silk Shawl Rs. 28.
4275 Purple Cotton Silk Dress Rs. 6.

### Mukjee Tookram, Exhibitor.

4276 Large Red Silk Scarf Rs. 15.
4277 Square White Silk Shawl Rs. 28.
4278 Do Gray do Rs. 28.

---

### Apothecary Barnes, Exhibitor.

6737 Specimen of stone carving Elephant
6738 Do of do (Bull.)
6739 Do of do (plain) Elephants

---

### S. B. Kristnasawmy Iyengar, Exhibitor.

6740 Pair of artificial Mangoe Bunches each containing 4 Mangoes.
6741 Sorts of Paddy as per list.

---

### Poonnajee Row, Exhibitor.

6742 Red Embroidered saddle with Head stall Rs. 90.

---

### Hunajee Row, Exhibitor.

6743 Brown saddle with bridle straps Rs. 100.

---

### Poonnajee Row, Exhibitor.

6744 Fancy saddle cloth Rs. 14.
6745 Gold lace saddle cloth Rs. 225.

---

### Local Committee Exhibitors.

6746 Single man's carpet As. 12,
6747 Carpet Rs. 1,8.
6748 Small carpet Rs. 1-5.
6749 do. do. As. 10.
6750 Cholcy As. 5.
6751 do. As. 5.
6752 do. As. 6.
6753 do. As. 5.
6754 do. As. 8.
6755 Woman's cloth Rs. 6 4.
6756 Superfine woman's cloth Rs. 14.
6757 Woman's cloth Rs. 4 12.
6758 do. Rs, 5-12.
6759 do. Rs. 8 8.
6760 do. Rs. 3-4.
6761 do. Rs. 3-6.
6762 Coarse Turband white Rs. 2 1.
6763 Superfine Black Turband Rs. 24.
6764 White Turband good Rs. 6.
6765 Superfine white Turband Rs. 14-4.
6766 do. Dhotra Pair Rs. 10-8.
6767 Coarse Dhotra Pair Rs. 4.
6768 Butchkana pair course Rs. 1.
6769 Superfine Buchkana pair Rs. 1-12.
6770 Woman's cloth Rs. 5-4.
6771 Girl's cloth Rs. 5-1.
6772 do. do. Rs. 4-6.
6773 Choley As. 8.
6774 Do As. 8.
6775 Do As. 10.
6776 Do As. 13.
6777 Do As. 8.
6778 Do As. 9.
6779 Do As. 12.
6780 Do As. 9.
6781 Do As. 13.
6782 Do As. 8.
6783 Do As. 7.
6784 Do As. 7.
6785 Do As. 7.
6786 Do As. 6.
6787 Do As. 7
6788 Do As. 12.
6789 Do As. 5.
6790 Do As. 6.
6791 Do As. 6.
6792 Do As. 8.
6793 Do As. 6.
6794 Do As. 6.
6795 Do As. 7.
6796 Do As. 10.
6797 Do As. 8.
6798 Coarse woman's cloth As. 15.
7799 Pair of men's cloth As. 15.
6800 Piece of Tent cloth Rs. 1-15.
6801 Do of trowser cloth Rs. 2-10.
6802 Course check woman's cloth As. 12.
6803 Imitation Bed Ticking As 15.
6804 Six Handkerchiefs As. 12.
6805 Trowsers check cloth Rs. 1-12.
6806 Do Do Rs. 1-12.
6807 Piece of Bleached Trowsers cloth Rs. 2 12.
6808 Do of Do Do Rs. 2-4.
6809 Do of chintz 8 yards Rs. 1-12.
6810 Do of Do 8 Do Rs. 1-12.

---

### Lieut. Wilkieson, Exhibitor.

6811 Gum Resin.

---

### Lieut. Puckle, Exhibitor.

6812 Metal mirror.

---

### Local Committee Exhibitor.

6813 Native silk cloth Rs. 6-10.

---

### Sooba Row, Exhibitor.

6814 Pair of arrow cases Rs. 50.
6815 Do of Embroidered belts Rs. 40.
6816 Toy jacket Rs. 25.

---

### Local Committee, Exhibitor.

6817 Pair of rugs Rs. 11.
6818 Do of Do Rs. 9.
6819 Do of Do Rs. 9.

## James Western Veterinary Surgeon Horse Artillery Exhibitor.

6820 A sword with electro plated ornaments.
6821 A sword with electro plated ornaments,
6822 A crisse handle and ornaments of sheath made of copper at Bangalore plated.
6823 A dagger made at Trichinopoly, handle and ornaments of Scabbard silver electro gilt.
6824 A pair of native brass stirrups plated.
6825 A Cigar lighter Trichinopoly made of silver gilt.
6826 A Burmese Idol—Plated and Polished.
6827 A Brass lamp cast at Bangalore plated.
6828 A small Brassfigure forming a lamp cast at Bangalore gilt.
6829 A Burmese Poongee House of four pieces—Plated.
6830 A Brass bell cast at Bangalore plated.
6831 A Burmese Peacock gilt.
6832 A Burmese Pagodah of two pieces partly plated partly gilt.
6833 A Burmese Idol Plated.
6834 A Copper lamp cast at Banglore plated.
6835 A small brass figure forming a lamp cast at Bangalore Match to no. 6828 plated.
6836 A Brass Elephant Rider cast at Bangalore Plated.
6837 A smallbrass figure cast at Bangalore gilt.
6838 A small Burmese image plated.
6839 A pair of Burmese brass ear rings gilt.
6840 A brass bullcast at Bangalore plated
6841 A Copper Hindoo Idol plated.
6842 A small brass figure cast at Bangalore Match to no. 6837 gilt.
6843 A brass figure of a Horseman cast at Bangalore plated.
6844 A copper figure of a Hindoo female cast at Bangalore plated.
6845 A small copper Hindoo Idol cast at Bangalore plated.
6846 A copper lamp cast at Bangalore Match to no 6834 plated.
6847 A brass Bangle for the ankle Manufactory unknown plated.
6848 3 Brass wire chains made at Bangalore plate.
6849 A Brass sotah cast at Bangalore plated.
6850 A pair of Brass native armlets made at Bangalore gilt.
6851 A Brass Rosette for head ornament made at Bangalore partly plated and partly gilt.
6852 A Brass chunam box made at Bangalore plated.
6853 A pair of brass wire bracelets made at Bangalore gilt.
6854 A brass Native comb made at Bangalore plates.
6855 A Burmese Idol Dragon gilt.
6856 A Bunch of seven brass chains for hair ornament made at Bangalore gilt.
6857 A brass wire neck chain made at Bangalore gilt.
6858 A brass betel cutter steel blad made at Bangalore Plated.
6859 A brass ornament for child's waist made at Bangalore Plated.
6860 A brass chunam box made at Bangalore Match for No 34 gilt.
6861 A pair of brass wire bracelets made at Bangalore Match for No, 35 gilt.
6862 A pair of brass armlets made at Banga loregilt
6863 A brass rosette for hair ornament Plated.
6864 A brass Sotah cast at Bangalore Plated,
6865 A copper spoon made at Bangalore Plated,
6866 Three brass wire neck chains made at Bangalore gilt,
6857 A Burmese betèl box of silk er gilt

---

## Captain Thomas Hay Campbell, Exhibitor.

9311 "The Campbell Hammer" made up in the Bangalore Arsenal to be worked by manual labor, or adapted to Steam Wind or water power.

A Hammer upon this principle has for many months been in daily use in the Bangalore Arsenal and large masses of Iron have been forged with it.
Dimensions of *model* Length 11 feet Breadth 4 feet Height 11 feet.

9312 "Bangalore High Guage Grummets" made up in the Bangalore Arsenal.
No. 1 of Leather No. 2 of Duck.

First Class Foreman George Ambrose, Exhibitor.

9313 "Improved Water Cart and Roller" chiefly adopted for grass and Garden walks.
If used for Grass the Roller to be of wood if for Roads, of stone or Iron.

Gunner Jeremiah Coglan of Horse Brigade Artillery, Exhibitor.

9287 1 Buffaloe Hides Rs. 13.

9283 1 Bullock Hides Rs. 12.
9289 1 Cow do Rs. 8.
9290 1 Buggy Top Rs. 9
9291 2 Elk skins each Rs. 9.
9292 1 Pig skin Rs. 10.
9293 1 Bear skin.
9294 3 Calf skins waxed each Rs. 3-8
9295 3 Goat skins black each Rs 3.
9296 6 Sheep skins each Rs 2.
9297 6 Calf skins unborn each Rs. 1
9298 10 Lamb skins unborn each As 8
9299 Antilope skins Rs. 1
9300 4 Cheta skins.

# BELLARY.

## Local Committee, Exhibitors.

### Mineral Kingdom.

1335 five [illegible] } 23½ seers.
1336 one [illegible] } Rs. 10-8.
1337 two [illegible]

Brass wares are extensively made in the Bellary Koodlaghee and Punchapalum Talooks, and are in much demand.

## Koodlaghee Tahsildar, Exhibitor.

1338 two pieces of Brass,
1339 one Chomboo,
1340 one small Borony,
1341 one Incense Burner,
1342 two small Plates,
1343 one Bell and
1344 one Toy, containing seers 5, @ 6 As. } Rs. 2-1.

In the Bellary Market Brass Wares are sold at 7 Annas per seer.

## Local Committee, Exhibitors.

1345 Copper Stone and Sand.

There is a Hill called Copper Hill near Heerahall in the Bellary Talook, and there is also a tradition among the people that Copper was worked formerly from the above Hill.

1346 two Chomboos, } seers 9½ @ 8 As.
1347 two Plates, } Rs. 4-8.
1348 six Brass and Copper Images, seers 6, @ 14 As. Rs. 5-4.

## K[illegible]laghee Tahsildar, Exhibitor.

1349 I[illegible] Stone, red.
1350 do. do. grey.
1351 Bloone or Cuttee.
1352 two do. do. Bars.
1353 half two Plans.

Iron is manufactured extensively in the Koodlaghee Talook, an account of the Iron Furnaces have already been published.

## Local Committee, Exhibitors.

1354 Iron Sand.
1355 do. Brown.
1356 do. Grey.
1357 do. Prismatic.
1358 do. with Antimony.
1359 two do. Bars.
1360 Different kinds of Stone mixed with Iron.

There is an abundance of Iron Ores in this District. Those from the Soondoor Zemindary are considered the best. The stones are preferred to the sand.

1361 Steel.

It is manufactured to a small extent in the Koodlaghee Talook.

1362 Bell Metal and, } seers 2, @ 8 As.—Rs. 1.
1363 one Chomboo. }

A very inferior kind is in use in this District.

## Syed Hoossam, Exhibitor.

1364 Gun Lock, Rs. 6.
1365 Silver Compass, Rs. 4.
1366 Brass do. Rs. 2.

## Local Committee, Exhibitors.

### Alkalies, Earths and their Compounds.

1367 Soda Nitrate of.

This District abounds with this kind of earth.

1368 Soda Carbonate of.

This earth is chiefly used by Washermen.

1369 Saltpetre, 1st sort.
1370 do. 2d do.

This District is very favourable for the manufacture of Saltpetre. The earth is put into pits made for the purpose and mixed with salt water. The water is then drawn off into earthen pots and boiled and afterwards poured into shallow vessels and allowed to dry.

1371 Saline Earth.

The earth from which common or earth salt is usually manufactured in this District.

1372 Earth Salt.

It is manufactured nearly in the same manner as Saltpetre; only the water is not boiled as in the other case. It is most extensively used in this District. The people however prefer sea salt, but for its price which is sold at 16 seers per Rupee.

## Penoogondah Tahsildar, Exhibitor.

1373 Bangles.
1374 Saline Earth.
1375 Choutee Billaloo or pieces made from the above.
1376 Ingredients used in giving colour to the Earth.
1377 Gajoo Gedda or the substance from which bangles are made.
1378 Bangles or Gajooloo.

These are made from a kind of soda or saline earth The process is more laborious than that of making Saltpetre and occupies nearly two months.

[illegible] PRESS—J. P. L. C. CONNOR, PRINTER.

### Local Committee, Exhibitors.

1379 Chalk.

Fifteen different kinds of Chalk Earth produced in the Ramanmallay Hills.

1380 Lime or Lime Stone.
1381 do. do.
1382 do. do.
1383 do. do.

Found in abundance in this District.

---

### Basawa Potter in Adonie, Exhibitor.

1384 Clay.

Used for making Chatties, &c.

1385 Clay.

Used for making Pipes, &c.

---

### Local Committee, Exhibitors.

1386 Red Ochres.
1387 Yellow Ochre.

Found in abundance in the Yadakee Talook.

1388 Bob or Red Earth.

Found in the Koodlaghee Talook.

1389 Flints, 1. Red. 2. Brown. 3. Black.

Found in abundance in the Yadakee and Adonie Talooks.

1390 Granites.

Different kinds of granite stone found in the Bellary District. They are extensively used for building purposes.

1391 Marble.

Found in the Yadakee Talook. It is used for making vessels, &c.

1392 Sand Stones.

Found in Romondroog in Bellary.

1393 Hone stone, inferior kind.

Found in abundance at Jonk in the Kumply Talook, 20 miles north of Bellary and country adjacent likely to be useful for rough hones or knife sharpening stone of a kind similar to what are used in England and sold under the designation of rag stones.

---

### Punchapalem Tahsildar, Exhibitor.

1394 Diamond Stones.

Taken from the Mine in which diamonds were formerly found in Moonemadoogoo. These Mines are not worked now but small grains of diamond are even now occasionally found.

---

### Local Committee, Exhibitors.

1395 White Stones.

Found in abundance in the beds of Rivers and Nullahs, used sometimes for Polish.

### Anantapoor Tahsildar, Exhibitor.

1396 Quartz Crystalline, Blue.
1397 do. do. White.
1398 do. do. Smoky.

These are found in the Mines at Singanamalay an other places of the Anantapoor Talook.

---

### Local Committee, Exhibitors.

1399 Soap Stone.

Found in the Adonie and Tadpurie Talooks, 5 Annas per maund, used for Polish, &c.

1400 Pot Stone.

Found in abundance in the Hurpunhully Talook used chiefly in making vessels.

1401 Talc.

Produced in abundance in the Punchapalum Talook, and in many other parts of the District, 2 Rupees per maund.

The Bellary District contains many and valuable kinds of mines, but the science and Capital of Europe are necessary to develope its resources fully.

### Spices and Condiments.

1402 Areca Nuts, raw.

Is cultivated in abundance in the wet Talooks of this District.

1403 Areca Nuts, boiled.

It is in this form that Areca Nuts are chiefly sold in the bazars.

1404 hundred Betel Leaf, 2 Pice.
1405 Chillies.
1406 Ginger.
1407 Cummin.
1408 Mustard.
1409 Turmeric.
1410 Coriander Seeds.

Cultivated in all the Talooks of this District.

### Sugar Series.

1411 Sugar, white
1412 do. brown.
1413 Jaggery.

Sugar Cane cultivation is carried on to the extent of 5500 Acres in this District, but it is manufactured into Sugar in the Bellary and Hindoopoorum Talooks only.

In Fusly 1265—5347 Acres of wet land were cultivated with Sugar Cane in this District.

1414 Date Jaggery.

Date Trees grow spontaneously and in abundance in this District. Toddy is extracted from the Date.

### Dyes.

1415 Safflower.
1416 Corthanens Tinctorius.
1417 Pulas Flowers.
1418 Butea Frondosa.
1419 Myrobolans Belleric.
1420 do. Chebulic.
1421 Turmeric.
1422 Lac Gum.
1423 Indigo.
1424 Papli Chuckay.
1425 Ventilago.
1426 Muddy Chuckay or Bark of Citrifolia.

1427 Morinda.
1428 Aliakoo Memecylon Tinctorium.
1429 Lac Stick.

Produced in the Bellary District.

---

## Anantapoor Tahsildar, Exhibitor.

1430 Cheroonjee, Red Eye.

In Fusly 1265 the quantity of land cultivated with Indigo was 1116 Acres in this District. The other stuffs for dyeing can be had in the bazars but are not produced in this country.

---

## Local Committee, Exhibitors.

### Tanning Substances.

1431 Babool
1432 Turwar.
1433 Poungranate kind.
1434 Myrobolans.

These are the principal substances used for tanning in this District and can be produced in abundance.

---

## Koodlagee Tahsildar, Exhibitor.

### Gum and Gum Resins.

1435 Babool Gum.
1436 Acacia Arabica.
1437 Drisina Gum.
1438 Sirissa.
1439 Wood Apple Gum.
1440 Mooringa.
1441 Booraga or Bombox Malaboriane.
1442 Pulas or Butea Frondosa.
1443 Ficus Indica Hill.
1444 Shaymcotay Gum Semecarpus Duacardum.
1445 Caroo Moonga Gum.
1446 Jack Fruit Gum.

Produced in this District in abundance. These gums are chiefly used for paste in this District.

1447 Vengay Marum.
1448 Ptrocarpus Marsupium.
1449 Andoogachettoo Gum.
1450 Acacia Cencophlea Gum.
1451 Moorgasa Gum.
1452 Chemdra Tree Gum.
1453 Jana Tree Gum.
1454 Wild Mango Tree Gum.
1455 Someechettoo Tree Gum.

---

## Local Committee, Exhibitors.

### Oil Series.

1456 Hemp Seed.

Is cultivated extensively in this District, for the sake of the Fibre.

1457 Illappoo.

Can be had in abundance in this District.

1458 Castor Oil Seed.

Is cultivated extensively in this District. Oil chiefly used for medicinal purposes.

1459 Lamp Oil Seed.
1460 2d sort do.

Is cultivated extensively in this District, chiefly used for lighting purposes.

1461 Lamp oil, wild.

This is a Jungle product. Oil is extracted from it by the inhabitants of the Koodlaghee Talook.

1462 Cocoa.

Cocoanut Trees are cultivated to a limited extent in this District and are prepared for extracting oil only in the Royadroog Talook.

1463 Poon Seed.

Found in abundance in the Koodlaghee Talook.

1464 Ground Nut.

Is cultivated in the Hindoopoorum Talook.

1465 Poppy Seed.

Is cultivated to a limited extent in the Hindoopoorum, Madugserah and Koodlaghee Talooks.

1466 Neem or Margosa Seed.

Found in considerable quantity in this District.

1467 Gingely, white
1468 do. black.

Is cultivated extensively in this District.

1469 Mustard.

Is cultivated in all the Talooks.

1470 Ramtil.

Is much cultivated in the Koodlaghee Talook.

1471 Koosoom.

Is cultivated in the Adonie, Goollem Punchapollem and Gootty Talooks.

1472 Linseed.

Is cultivated extensively in this District.

1473 Shayncotay.

Jungle product.

1474 Poonga.

Can be had in abundance.

1475 Anise.

Is cultivated in the Koodlaghee, Raidroog and Madugserah Talooks.

1476 Khus Khus or Vitiues.

Is cultivated in the Hindoopoorum, Madugserah and Koodlaghee Talooks.

1477 Cucumber Seed.
1478 Melon Seed.
1479 Pumpkin Seed.

Is cultivated in abundance in this District, but the Oil is extracted from them nor are the seeds sold in no bazar.

1480 Bonduc Nut.

Jungle product.

1481 Pulas.

Is found abundantly in jungles.

1482 Nux Vomica.

Found in abundance in the Soondoor Hills.

1483 Sweet Fennel.

Is cultivated in the Raidroog and Hindoopoorum Talooks.

1484 Coriander.

Is cultivated in this District.

1485 Cummin.

Is cultivated in abundance in this District.

1486 Fenugreek or Vendeum.

Is cultivated in this District.

1487 Bishop's Weed Seed.

Is cultivated in the Bellary, Raidroog and Hindoopoorum Talooks.

1488 Sweet Flag.

Is cultivated in the Koodlaghee and Bellary Talooks.

1489 Tobacco Seed.

Is cultivated in this District to a considerable extent.

1490 Gogoo.

Is cultivated extensively in this District, the fibre of this plant is in much demand for ropes.

1491 Tagray Vittoolo.

Is cultivated in the Bellary District.

1192 Agasee Vittooloo Seed of Agatigrandiflora.

Is cultivated in this District.

1493 Varjapacoo or Cullyana Moorookoo Seed.

Found in abundance.

1494 Water Melon Seed.

Is cultivated abundantly in this District.

1495 Cotton Seed.

Is cultivated extensively in this District.

1496 Mooroonga Seed.

Is cultivated extensively. The pod or fruit used as pulse by the Natives.

1497 Jamaica Yellow Thistle.

Found in abundance.

1498 Sarapappoo or Seed of Wild Mango.

Found in a limited quantity.

1499 Seed of Ragoo Chettoo or Zizyphus Gujeeba.

Found in abundance.

1500 Thorn Apple Seeds.

This is a wild product and found in abundance.

N. B.—The above are produced in this District, although no oil is extracted from all of them for general use, yet as it is extracted occasionally for medical purposes, the Local Committee have forwarded specimens of them for being exhibited. The Committee are indebted for some of these to the Raidroog Tahsildar.

## Oils.

1501 Margosa.
1502 Ippe.
1503 Gingely.
1504 Coosoom.
1505 Lamp.
1506 Linseed.
1507 Cocoanut.
1508 Castor.

Produced in Bellary. These are the principal Oils in use in this District.

## Grains cultivated as Food for Man in this District.

1509 Wheat, 1st sort.

Is cultivated in this District, but only to a very small extent.

1510 Wheat, 2nd sort.

Is cultivated in this District in abundance, requires the best land.

1511 Rice, 1st sort.
1512 Rice, 2nd sort.

White red and black paddy of various sorts are grown in this District in abundance.

1513 Raggy.

Is cultivated in this District in great quantity.

1514 White Jonnaloo.

Is cultivated in great abundance in this District. Large quantities are conveyed to other Districts for sale. Is the principal article of food among the lower classes of the people.

1515 Neroo Jonnaloo.
1516 Red do.

These 3 sorts of Jonnaloo are grown in this District.

1517 Spiked Millet.
1518 Italian do.
1519 Common do.

Is cultivated extensively in dry land.

1520 Indian Corn or Mucka Cholum.

Is cultivated extensively in this District.

1521 Samaloo.
1522 Carraloo.

## Pulses used as Food for Man, in this District.

1523 Fenugreek.

Is cultivated extensively in this District.

1524 Chick Pea or Bengal Gram.

Is cultivated much in this District.

1525 Lentil.

Is cultivated in the Hindoopoor and Koodlaghee Talooks.

1526 Green Gram.
1527 Moony or Monash.
1528 Horse Gram.
1529 Bullar.
1530 Pegion Peas or Dholl.
1531 Alasundooloo or Karamany.
1532 Madepasaloo.
1532½ Badaloo or Broken Dholl.

Is cultivated extensively in this District.

## Medicinal Substances.

1533 Hydrocotyle.

Used for removing heat and for Rheumatic complaints.

1534 Bondue Nut.

For Fever and Inflamation.

1535 Maraka Vittooloo.

For purifying Blood.

1536 Strichynos Nux Vomica.

For Rheumatic complaints.

1537 Cachoo Vittooloo.

For Bile complaints.

1538 Chenopolium Album.

For Purging.

1539 Indigo Seed.
1540 Gunjaroo Vittooloo.
Used for Decoctions in case of Fever, &c.
1541 Semecarpus Anacardium.
Used in the place of Costic, &c.
1542 Anise Seed.
Used for Decoction.
1543 Cucurluta Lagenaria.
Used in Medicinal Oils.
1544 [illegible]
Used for Venereal complaints.
1545 Raddish Seed.
Used for Piles.
1546 Pootrunjee Vittooloo.
Used for the removal of heat with other ingredients.
1547 Vitex Negundo.
Used for Rheumatism.
1548 Melon Seeds.
1549 Beans.
1550 Cowitch Seed.
Used for recruiting strength.
1551 Choonchoo Vittooloo.
Used for Venereal complaints.
1552 Hyperanther a Moringa.
For purifying Blood.
1553 Cucumber Seed.
For Urine complaints.
1554 Cucumis Acutamilus.
For Emetic.
1555 Neem Seeds or Margosa Seed.
Used for healing sores in the Tongue.
1556 Hemp Seed.
For preventing Purging.
1557 Bauvunchi Vittooloo.
Used for healing Itch.
1558 Buchala Vittooloo.
Used for Indigestion.
1559 Ungara Guddy Vittooloo.
Used for Fever.
1560 Pennaroo Gudda Vittooloo.
1561 Gungoni Vittooloo.
For removing Heat.
1562 Barleria Longifolia.
For renovating Strength.
1563 Moodra Benda Vittooloo.
For stopping Purging.
1564 Tella Goondi Vittooloo.
For Bile complaints.
1565 Wild Liquorice Seed, red.
1566 do. black.
Used in Oils for curing Bald Head.
1567 Water Melon.
For burnings in the Stomach.
1568 Mango Seed.
For Dysentry.
1569 Seed of the Alangium Decapetalum.
For Liver complaints.
1570 Clearing Nut.
For Venereal complaints.
1571 Duttoory Vittooloo.
For Itch.
1572 Actryranthes Aspera.
For Cough.
1573 Barikee Vittooloo.
For renovating strength.
1574 Hixbiscus Isarlontus.
For stopping Purging.
1575 Cata Badamy.
For healing Sores.
1576 Vamita Vittooloo.
For Rheumatic complaints.
1577 Soap Nut.
For Fever and Headache, &c.
1578 Mustard, white.
For Rheumatic complaints.
1579 Budramoostiloo.
1580 Root of the Mat Grass or Cyperus Junsefolia.
For Fever.
1581 Moonnoota Karakaya.
For Inflamation.
1582 Colocynth.
For Purging.
1583 Maroolo Mathungee Kaya.
1584 Vadamoora Kaya.
1585 Vayoo Velum Galoo.
1586 Gooroomoodee Akoo.
1587 Muthone Monthoo Vomum.
For Rheumatic complaints.
1588 Worm Wood Seed.
For removing Heat.
1589 Myrobalan Chebulic.
Used much for Decoctions.
1590 Leaf of the Malabar Nut Justicia Adatoda.
For Headache.
1591 Raugakasarawloo.
For Purifying Blood.
1592 Berjera Konigu.
1593 Ananoo Poovoo.
For Bile complaints.
1594 Sun Flower.
For renovating Strength.
1595 Gaudy Birthwort.
For Venereal complaints.
1596 Purpatakum.
1597 Choory Vomum.
For Fever.
1598 Indian Gum Arabic.
For Toothache.
1599 Oleandur.
For Eye Sore.

1600 Henbane.
For Liver complaints.
1601 Indigo Leaf.
The Juice is externally applied in Rheumatical cases.
1602 Henbane.
1603 Golesury Poovooloo.
1604 Moottul Moorckee.
For Piles.
1605 Bishop's Weed Seed.
For Indigestion, &c.
1606 Gum Arabic, country.
For recruiting Strength.
1607 Cummin Seed.
For Bile complaints.
1608 Asbestes.
For Venereal complaints.
1609 Thellooppee.
1610 Physales Flexulera.
1611 Meins Permum Cardifolum.
1612 Enolunlus Alsenoides.
For Fever used in Decoction.
1613 Potash.
1614 Sweet Flag, wild.
Rheumatic complaints.
1615 Mauthungee Akoo.
Headache.
1616 Nucka Pitty Gudda.
Purifying Blood.
1617 Chathoo Bearakaya.
Emetic.
1618 Hyperanthera Moringa.
1619 Rawthy Pundoo.
Recruiting Strength.
1620 Wild Onion.
Used as a remedy in cases of Poison.
1621 Nunju Checka.
For Fever.
1622 Volkameria Inermis.
For Rheumatic complaints.
1623 Turwar or Cassia Ariculata.
For preventing Purging.
1624 Prickly fruited pedallium.
For recruiting Strength.
1625 Mungary Kaya.
For Rheumatic complaints.
1626 Orchiades.
1627 Curculigu Fossils.
For recruiting Strength.
1628 Ericky Pundloo.
For Healing Sores in the Tongue.
1629 Lotus Flower.
1630 Myrobolanemblic.
For removing Heat in the Body.
1631 Sweet Fennel.
For Decoction in cases of Fever.
1632 Ginger.
For Decoction in Bile, &c.
1633 Miyooroo Sukee.
For Rheumatism.
1634 Gauray Pundoo.
For Rheumatic complaints.
1635 Surusvuthy Akod.
1636 Boochucra Gudda.
1637 Prickly Fruited.
For Fever.
1638 Nullooppee.
For Fever and Leprosy.
1639 Aloe.
1640 Ranookooloo.
For Cough.
1641 Barleria Longifolia.
For Recruiting Strength.
1642 Root of the Ocunum Sanctina.
For Fever.
1643 Peddamoolaka.
For Cough.
1644 Thippa Theagha.
1645 Phylanthus Nirnic.
For Venereal complaints.
1646 Root of Nux Vomica.
For Rheumatic complaints.
1647 Purging Cassia.
For Purging.
1648 Fruit of Babool Tree.
For Toothache.
1649 Root of Senna.
For Purging.
1650 Jungle Coriander.
For Rheumatism.
1651 Bark of Morinda Cetrifolia.
For Fever.
1652 Country Sarsaparilla.
For Purifying Blood.
1653 Ocunum Sanctina.
For Fever.
1654 Indian Birthwart.
For Rheumatism.
1655 Sarsaparilla.
For Purifying Blood.
1656 Achyranthes Aspera.
1657 Chittaw Mootty Varoo.
For Fever.
1658 Nala Goommudy Varoo.
For Rheumatism.

1659 Nela Vamboo.
For Fever.

1660 Ceylon Leadwort.
For Rheumatism.

1661 Babool Bark.
For Toothache.

1662 Jamaica Yellow Thistle.
For Fever.

1663 Gathura[illegible]a Gudda.
For Bile, &c.

1664 Adavee Yalakooloo.
For Bile complaints.

1665 Vittoo Vanydallee or Nimmapundoo Poovooloo.
For removing Heat.

1666 Elephant Bondue Nut.

1667 Turmeric.
For removing wind.

1668 Seed of the Termenalia Blerica.
For Emetic.

1669 Cocoa Flower.
For removing Heat.

1670 Puchary Akoo.
For Headache.

1671 Saraparoopoo or kernel of the wild Mango.
For recruiting Strength.

1672 Boomythoomma Vittooloo.
For Emetic.

1673 Seed of the Aegle Marmelos.
For removing Heat.

1674 Kistna Abaurgoo.
Used for making White Lead, &c.

1675 Podor Shell of the Aegle Marmelos.
For removing Heat.

1676 Indian Madder.
1677 Choornum Gudda.
For Fever.

1678 Seekaya Vittooloo.
For Sores.

1679 Gunpodoo.
1680 Adavee benda Vittooloo.
For stopping Purging.

1681 Chadoo Indra Beloova.
For removing Heat.

1682 Adavee Thunda Vittooloo.
For Sores.

1683 Turwar Flower.
For removing Heat.

1684 Phy Lanthus Emblica.
For Toothache.

1685 Samoodra Palum Vittooloo.
Used as a remedy for complaints in the Eye.

1686 Sree Gundapoo Vittooloo.
Used in Oils.

1687 Mint Leaf.
For Bile complaints.

1688 Kala Pippulloo.
For Fever.

1689 Adavee Thoomma Kaya.
1690 Root of the Marinda Citrifolia.
For recruiting Strength.

1691 Adavee Rayla Vittooloo.
For Purging.

1692 Turwar Seed.
1693 Seed of Ficus Relegiosa.
For recruiting Strength.

1694 Verbena Nodiflora or Tobacco Seed.
For Sores and Ulcers.

1695 Pal Thookum.
For Piles.

1696 Earth Salt.
For removing Rheumatism.

1697 Solanum Puliessent.
For preventing running in the Nose.

1698 Chathoo Beera Vittooloo.
For Emetic.

1699 Wild Date Seed.
1700 Chiretta.
For recruiting Strength.

1701 Sorrel.
For Bile complaints.

1702 Mango Seed, tender.
For stopping Purging.

1703 Juvee Vittooloo.
For recruiting Strength.

1704 Brinjal Seed.
1705 Nullavalevy Vittooloo.
1706 Seed of Ficus Racemosa.
For Rheumatism and Bile complaints.

1707 Seed of Myrobolan Emblic.
For removing Heat.

1708 Cassia Ariculata.
For side Pain.

1709 Turwur Seed, 2d sort.
For preventing Purging.

1710 Theepoo India javaloo.
For removing Heat.

1711 Vomum Poovoolloo.
For Cough.

1712 Voodaura Vasin Poovooloo.
1713 Sapydra Mosiry.
For removing Heat.

1714 Benzoin.
For Headache.

1715 Root of Aegle Marmelos.
For Digestion.

1716 Erra Valoodoo Putta.
1717 Bark of Ficus Racemosa.
For Rheumatic complaints.

1718 Bark of Ailamthus Excelsa.
1719 Chathoo Petla Theaga.
For Fever.

1720 Gunpodoo Theaga.
1721 Checkool Akoo.
For Rheumatism.

1722 Moolloo Pauper Chettoo Theaga.
For Dysentry.

1723 Tree Turmeric.
For Fever.

1724 Thegada Varoo.
For Purging.

1725 Root of the Lotus.
For removing Heat.

1726 Chegata Puttah.
1727 Poorooda Rutnum.
1728 Chettoo Bashee.
For Recruiting Strength.

The purposes for which these medicines are used as stated by the Exhibitor are given above.

---

## Ahobala Row, Tahsildar, Exhibitor.

**Fibres produced in the Bellary District.**

1729 Zilladoo Colotropis Gigantea.
1730 Kudechika Fibre.
1731 Paulava do.
1732 Plantain do.
1733 Conda Zanapha, Wild Hemp.
1734 Wild Alœ Fibre.
1735 Gogoo do.
1736 Hemp.
1737 Cocoa Fibre.
1738 do. do.
1739 do. do.
1740 Wild date, do.
1741 do. do.
1742 Palmyra do.
1743 Mogely do.
1744 Wild Cotton Tree do.
1745 Wild Soapnut do. do.
1746 Kulekee do. do.
1747 Palavaranoo do. do.
1748 Chinna Janachettoo do.
1749 Eggadatur tree do.
1750 Nate kauditur do. do.
1751 Wooloosoo do. do.
1752 Poldajana do. do.
1753 Tooggalee do. do.
1754 Pillarapoo do. do.
1755 Kanaga or Morinda Cetrifolia do.
1756 Narapee do. do.
1757 Kondajoony do.
1758 Babool do. do. or Tellatoommah.
1759 Konda Rance Chettoo tree
1760 Konda Chella tree do.
1761 Nullatoommah or Babool tree of the black kind do.
1762 Boodda Jalee tree or kind Babool tree do.
1763 Seetapul tree do.
1764 Voddy Chettoo do.

---

## Goollem, Tahsildar, Exhibitor.

1765 Ragee Narah or Ficus Religiosa
1766 Marree Narah Ficus Indica.

The Principal Fibres in use in this District are Wild Aloe, Kemp, Gogoo, Narapee and Cocoa.

---

## Local Committee Exhibitors.

**Timber and Fancy Wood.**

No Timbers grown in Bellary. The small pieces of wood now sent are specimens of trees of small size found in Ramanmalay.

1767 Nulla Vootee.
1768 Nulla Purigee Chettoo.
1769 Taragoo Mola.
1770 Ara Chettoo.
1771 Thoondiga do.
1772 Balasoo do.
1773 Erragoommady.
1774 Kelunda Moockady.
1775 Poolla Buchalee.
1776 Kunda Ragee Chettoo.
1777 Moorike do.
1778 Jumbee do.
1779 Adavee Sekaya do.
1780 Moga Thoondiga do.
1781 Karay do.
1782 Thonda do.
1783 Vootrajeevy do.
1784 Hootatha do.
1785 Palavaranoo do.
1786 Sawdavy do.
1787 Moolloo Thindoo Chettoo.
1788 Peny Yala do.
1789 Kooccanaradoo.
1790 Kakeereeca Jonna do.
1791 Veboothy Jonna do.
1792 Juvy do.
1793 Moga Beera do.
1794 Erra Purigee do.
1795 Garinda do.
1796 Eddoonaliga do.
1797 Nucka Pitta Geddy do.
1798 Ibbudy do.
1799 Errabana do.
1800 Chundra Chucka do.
1801 Munchy Toomarika.
1802 Voodaga do.
1803 Jeedy Ginja do.
1804 Nulla Janna do.
1805 Rayla do.
1806 Polikee do.
1807 Aniga Pullaroo do.
1808 Tandra do.
1809 Chilla Ginjala do.
1810 Chintha do.
1811 Poolcke do.
1812 Sreegundapoo do.
1813 Vapa do.
1814 Bobbidy do.

1815 Gutty Vadaroo.
1816 Nulla Voottee do.
1817 Vapy Nara do.
1818 Modooga do.
1819 Poonnamanoo.
1820 Nalavoosirica.
1821 Pedda Thungadoo do.
1822 Dunthy do.
1823 Bicky do.
1824 Kanaga do.
1825 Koondana Coonnula do.
1826 Koocka Valaga do.
1827 Nallagerivy do.
1828 Goodisa do.
1829 Sompady do.
1830 Atti do.
1831 Goni do.
1832 Chagoorathe do.
1833 Bugany do.
1834 Gorithecutta do.
1835 Moondla Gorivee do.
1836 Rawthe Gorivee do.
1837 Adivee Ippee do.
1838 Thakoo do.
1839 Munche Seekaya do.
1840 Tellavooppee do.
1841 Chinnakara do.
1842 Munga do.
1843 Peddavoosirika do.
1844 Adivee Meriyala do.
1845 Booraga do.
1846 Amatykaya do.
1847 Voolinda do.
1848 Vavily do.
1849 Nullatungadoo.
1850 Adavee Moonaga.
1851 Koocka Jada Chettoo.
1852 Moondla Vippa do.
1853 Toommy do.
1854 Goravunka do.
1855 Adadoondy do.
1856 Mogadoondy do.
1857 Thalisie do.
1858 Neroopoochakaya do.
1859 Adavi Uttee do.
1860 Pachary do.
1861 Peddamaunoo do.
1862 Kadadara do.
1863 Nullee do.
1864 Muddy do.
1865 Konda Jumboo do.
1866 Pedda Irikee Maunoo.
1867 Mogamuddy do.
1868 Goodisa do.
1869 Bingoa do. or Gungaravee do.
1870 Karakaya do.
1871 Adavee Ragee.
1872 Ratty Juvee.
1873 Panacy Chettoo.
1874 Metla Maunoo.
1875 Thotla Theaga.
1876 Boloo Vadooroo.
1877 Bundary Chettoo
1878 Tellamurri do.
1879 Mamidee do.
1880 Navily do.

## Caulapha, Exhibitor.

1881 Sheep Skin, As. 8.
1882 Calf's Skin, As. 12.
1883 Cow's Skin, Rs. 2-8.
1884 Bullock's Skin, Rs. 4.
1885 Buffaloe's Skin, Rs. 5.

## Fackrodeen, Exhibitor.

1886 Goat's Leather, Rs. 3-8.
1887 do. do. Rs. 2.

## Koodlaghee Tahsildar, Exhibitor.

1888 Tiger's Skin, As. 8.
1889 Deer Skin, As. 2.

## Local Committee, Exhibitors.

1890 Six pairs of Soldier's Boots, Rs. 3-12.

## Eeratha Carebasapha Setty, Exhibitor.

### Silk and Cotton Clothes.

1891 Women Cloth with flowers in Lace, Rs. 27.
1892 White do. do. Rs. 25-8.
1893 Keroomunjee Silk, white do. Rs. 20.
1894 do. do. do. Rs. 20.
1895 Capalarung, white do. Rs. 18-4.
1896 do. Silk, white flowered Woman Cloth, Rs. 18-4.
1897 Red flowered do. do. Rs. 17.
1898 Keroomunjee Silk, black do. do. Rs. 15-8.
1899 do. do. Rs. 15-8.
1900 Lace Payetenee do. do. Rs. 11-12.
1901 Gangunmall. red flowered do. do. Rs. 15-8.
1902 Red Silk, Women do. Rs. 16-8.
1903 Arabund Caparunel, black do. do. Rs. 7.
1904 Plain Black Chendracala do. do. Rs. 6-12.
1905 Caparumchoo Ghettyuenna do. do. Rs. 7-6.
1906 Red Boogadunchoo do. do. Rs. 4-12.
1907 Woman Cloth, black, Rs. 1-3-6.
1908 do. do. Rs. 1-3-6.
1909 do. do. Rs. 1-3-6.
1910 do. do. Rs. 1 3-6.
1911 Red Silk Madee, Rs. 11-8.
1912 Yellow do. do. Rs. 11-8.
1913 Blue do. do. Rs. 10-14.
1914 do. Silk Patee, Rs. 10-8.
1915 one Piece of Silk Cloth for Cholies for Women with white flowers and red borders containing 10 Cholies, Rs. 5-10-0.
1916 one Piece of Silk Cloth for Cholies for Women with white flowers and red boarders containing 10 Cholies, Rs. 5-4-0.
1917 one do. of silk do. do. 10 do. Rs. 11-1-0.
1918 one do. of Payatanee Patee, do. do. containing 7 Cholies Rs. 5-14-6.
1919 one do. of Black Chendracala do. do. containing 14 Cholies, Rs. 3-0-0.
1920 Placed Soosy, Rs. 2-10-0.
1921 do. do. Rs. 2-6-0.
1922 Trowsers do. black, Rs. 2-0-0.
1923 do. do. Rs. 2-0-0.
1924 do. do. Rs. 2-0-0.
1925 six Thread Cloth, white, Rs. 3-6-0.
1926 Black Paumedy Chintz, 16 cubits, Rs. 1-9-6.
1927 Red do. do. Rs. 1-11-0.
1928 do. do. do. Rs. 1-2-0.
1929 do. do. do. Rs. 1-6-0.
1930 Black do. do. Rs. 1-9-6.
1931 Brown do. do. Rs. 1-9-6.

Although silk is imported into this District, from the Mysore country; Silk Clothes are extensively manufactured in almost all the towns of Bellary.

### Sackeree Curdappa, Exhibitor.

1932 one Red Rayaloo Cotton Cloth, Rs. 1-14-0.
1933 one Red Payetenee do. Rs. 2-0-0.
1934 one Black do. Rs. 1-6-0.
1935 three Cotton Carpets, at Rupees 1-2-0, each 4½ cubits long, Rs. 3-6-0.
1936 three do. do. at Rupees 1-0-0, each 4 cubits long, Rs. 3-0-0.
1937 three do. do. at 13 Annas each, 3½ cubits long, Rs. 2-7-0.
1938 three do. do. at Rupees 0-6-6, each 3 cubits long, Rs. 1-3-6.

### Local Committee, Exhibitors.

1939 two Pieces of Plad Soosy, black, 9 yards, each, at Rs. 2-6-0 per piece, Rs. 4-12-0.
1940 six Pieces of Plad Green, 9 yards each, at Rs. 2-6-0 per piece, Rs. 14-4-0.
1941 four Pieces of Trowsers Soosy, at Rupees 2-0-0 per piece, Rs. 8-0-0.

These are manufactured in the Bellary Cowle Bazar and are in great demand among the Europeans and East Indians residing here.

### Kanoodekee Kumpiah, Exhibitor.

1942 two Cumblies, 7 × 3 at 3 Rs. each, Rs. 6.
1943 two do. 7 × 2¾ at Rs. 2-12 each, Rs. 5-8.
1944 one do. course 7 × 3 Rs. 1.
1945 two do. do. 5 × 2½ at 8 Annas each Rs. 1.

Manufactured from Country Sheep Wool. The best and Water proof Cumblies are manufactured in this District for Order.

### Adonie Tahsildar, Exhibitor.

1946 American Cotton.

Is cultivated to a limited extent, the crops being precarious. Value 3 Rs. per maund.

### Local Committee, Exhibitors.

1947 Country Cotton.

The quantity of land cultivated in Fusly 1265 was 1,25,730 Acres liable to be assessed at Rupees 1,61,868, value Rupees 2-4-0 per maund.

1948 Mirino Wool.

### Nagojee, Exhibitor.

1949 Country Sheep Wool.

### Mooneyapah, Exhibitor.

**Woolen Carpets.**

1950 Dr. Scott's Muster, 1½ yard square, Rs. 1-2.
1951 Rev. Wardlow's Muster, 1. do. do. As. 14.
1952 Bangalore Muster, 1. do. do do. As. 12.
1953 Mr. Ogilvie's Muster, 1. do. do. As. 12.

### Venkatachellum, Exhibitor.

1954 Tandroya Setty's Muster, Rs. 1.
1955 General Steel's Muster, Rs. 2-8.

The Exhibitors Mooneyapah and Venkatachellum, Carpet Manufacturers in the Town of Bellary; offer to manufacture Carpets, of any size, at the rates above mentioned.

### Ram Row, Goomastah, Exhibitor.

1956 one box containing Bead Works.

### G. Narrappa, Exhibitor.

1957 one black Cumbly.
1958 one do. do.
1959 one Cotton White Female Cloth with Silk and laced borders, Rs. 38.

### Mullappa, Exhibitor.

1960 one red Silk Female Cloth, with laced borders, Rs. 85.
1961 one black Head Cloth with laced borders, Rs. 20.

### C. Basapha, Exhibitor.

1962 one white Silk female Cloth called Tellapoovoola chera with silk and laced borders, Rs. 95.

### Tahsildar, Exhibitor.

1963 one white Silk Female cloth, Rs. 36.
1964 one black do. do. Rs. 28.
1965 one piece of White Silk Cholee Cloth with borders red, Rs. 2-8.
1966 one do. do. Cotton, Rs. 2.
1967 one do. called Roodralcheepatee, Rs. 2.
1968 one do. called Pagadasalaindloo or chess board kind, Rs. 1-8.
1969 one piece of Cholee called Pagadsalaindloo — chess board kind, Rs. 1-6.
1970 one do. do. Patanchoo, Rs. 1-4.
1971 one do. do. Rs. 1-3.
1972 one do. do. Rs. 1-6.
1973 one do. do. Rs. 1-4.
1974 one do. Pagadasala Boottee, Rs. 1-2.
1975 one do. Dagger edged plain cloth, Rs. 1-1.
1976 one do. Green Cloth, As. 14.
1977 one do. plain black, with red Silk borders, As. 12.
1978 one do. black of chess board kind, As. 9.
1979 one do. do. flowered, As. 13.

**Fibres.**

1980 Vendee Fibre.
1981 Telladasanapa Chettoo Fibre.
1982 Tippateaga do.
1983 Nullaroo.
1984 Madeechettoo do.
1985 Yerra Dasanapa Chettoo Fibre.
1986 Margosa Tree Fibre.

**Cotton kind.**

1987 Booraga Cotton.
1988 Zilladoo do.
1989 Jumboo do.
1990 Condapindee do.
1991 Jadaputtee.
1992 Onions, red.
1993 do. white.
1994 Benzoin.
1995 Green Stone.
1996 White Stones, round.
1997 two coloured Stone.
1998 Brass Plate, seers 1¼, As. 8.
1999 Copper Plate, seers 1½, As. 8.

## Oils.

2000 Thorn Apple Seed Oil, Rs. 1.
2001 Wild Mace Oil, Rs. 2.
2002 Prooms Oil, Rs. 3.
2003 Nutmeg Oil, Rs. 3.
2004 Rumatill Oil, As. 12.
2005 Wild Wargo Seed Oil, As. 8.
2006 Saurell Seed Oil, As. 12.
2007 Bitter Orange Oil, Rs. 2.
2008 Orange Oil, Rs. 1 As. 4.
2009 Kauttoopaugul Oil, As. 8.
2010 Paugu Seed Oil, As. 12.
2011 Hingan Seed Oil, Rs. 1 As. 12.
2012 Peerkunees Seed Oil, As. 12.
2013 Lemon Seed Oil, Rs. 1 As. 4.
2014 Citron Oil, Rs. 2.
2015 Wild Almond Oil, As. 12.
2016 Small Thorn Apple Oil, As. 12.
2017 Cinnamon Oil, Rs. 1.
2018 Indrojote Oil, Rs. 1 As. 8.
2019 Ground Nut Oil, As. 8.
2020 Koolunjun Oil, Rs. 1.
2021 Pootrajeevy Oil, Rs. 1.
2022 Cashoonut Oil, Rs. 1-8.
2023 Marknut Oil, As. 8.
2024 Khoobkala Oil, Rs. 1-8.
2025 Staff Tree Seed Oil, Rs. 1-8.
2026 Bauvoonjah Oil, Rs. 1-4.
2027 Pinthink Seed Oil, Rs. 1-8.
2028 Saraso Seed Oil, Rs. 4.
2029 Pestnut Oil, Rs. 1-8.
2030 Purging Seed Oil, Rs. 1.
2031 Egg Oil, Rs. 1.
2032 Wallnut Oil, Rs. 1-8.
2033 Anise Oil, Rs. 3.
2034 Fennel Seed Oil, Rs. 2.
2035 Cummin Seed Oil, Rs. 3.
2036 Almond Oil, Rs. 1.
2037 Cucumber Seed Oil, Rs. 1.
2038 Saraparoopoo Oil, Rs. 1.
2039 Soapnut Oil, As. 8.
2040 Water Melon, As. 12.
2041 Cotton Seed Oil, As. 12.
2042 Pumpkin Seed Oil, As 12.
2043 Kuckery Seed Oil, As. 12.
2044 Mustard Seed Oil, As. 12.
2045 Water Pumpkin Seed Oil, As. 12.
2046 Poppy Seed Oil, As. 12.
2047 Bees Wax Oil, Rs. 1.
2048 Melon Seed Oil, As. 12.
2049 Kaleyanah Pooseny Oil, Rs. 1-8.
2050 Rose Oil, As. 8.
2051 Jessamine Flower Oil, As. 10-6.
2052 Sandal Oil, As. 12.
2053 Cocoanut Oil in large bottle, As. 3 6.
2054 do. do. As. 1-6.
2055 Gingely Seed Oil, As. 1-6.
2056 do. do. As. 4.
2057 Castor Oil, As. 4.
2058 do. do. As. 4.
2059 Linseed Oil, As. 3.
2060 do. do. As. 3.
2061 do. do. As. 3.
2062 do. do. As. 3.
2063 Coosoom Oil, As. 1-6.
2064 Coosoom Oil, As. 1-6.
2065 Elooppoo Oil, As. 2-6.
2066 do. do. As. 2-6.
2067 Poongan Oil, As. 1-6
2068 Poongan Oil, Rs. 1-6.
2069 Margo seed Oil, As. 2-6.
2070 do. do. As. 2-6.
0271 ½ Emery, country, As. 4.
2072 Iron Ores Stone, As. 1.
2073 Iron Ores Sand, As. 4.
2074 Gum.
2075 Gum Arabic, As. 6.
2076 Karoovalum, P. 6.
2077 Elava, As. 6.
2078 Mooroongay, As. 6.
2079 Moorookum, As. 6.
2080 Autty, As 10.
2081 Scroo Naroovooly, As. 6.
2082 Tooganey, As. 6.
2083 Soamey, As. 6.
2084 Poovarasum, As. 6.
2085 Vada Naroyanum, As. 6.
2086 Kattoo Vogy, As. 6.
2087 Auvaururum, Rs. 1.
2088 Vunny, As. 6.
2089 Inknut tree Gum, As. 6.
2090 Katheelah, As. 6.
2091 Kondry, As. 6.
2092 Soapnut tree Gum, As. 6.
2093 Vell Vale, As. 2.
2094 Marknut tree Gum, As. 6.
2095 Margo tree Gum, As. 6.
2096 Coongelihum, As. 1.
2097 Sclarasum, As. 5.
2098 Dammer black, P. 6.
2099 Baunimthy Bolum, As. 2.
3000 Dekaumully, As. 1.
3001 Ciundruss, As. 2.
3002 Liqore Gum, As. 1.
3003 Ravull hinnen, Rs. 1, As. 4.
3004 White Rosin, As. 3.
3005 Gunthafarozi, As. 3.
3006 Room Musthkey, Rs. 1, As. 4.
3007 Wild Soapnut, As. 6.

## Fibres.

3008 Cocoa, As. 4.
3009 Poolichay, As. 4.
3010 Flax, As. 4.
3011 Bendicoys, As. 6.
3012 Chogah, As. 8.
3013 Aloes, As. 3.
3014 Toddy leaves, As. 2.
3015 Caldeera, As. 8.
3016 Innady, As. 6.
3017 Arasay, As. 6.
3018 Kull Alum, As. 6.
3019 Allum, As. 6.
3020 Moorookum, As. 6.
3021 Naroovooly, As. 6.
3022 Tapasey, As. 6.
3023 Atty, As. 6.
3024 Autty, As. 3.
3025 Karoovalum, As. 3.
3026 Chuchanara.

Joalla Singh Resident at Tattiara Re-Rohulla Rawalpindee Punjab, Exhibitor.

BACTRO-GREEK COINS.

9325 One Euthedimas silver tetra-drachm Rs. 20.
One Do. without name Rs. 5.
One Antiokos silver tetra-drachm Rs. 20.
Two Do do small each Rs. 6.
One Eukratidas do very small Rs. 3.
One Do do a little larger Rs. 3.
One Heliokles small silver naked head of Jupiter.
Four Menander silver drachmas each Rs. 3 Rs. 12.
Two Apollodotos square silver drachmas each Rs. 3 Rs. 6.
One Do circular silver drachmas Rs. 3.
One Do square copper large Rs. 2.
One Do do do Rs. 1.
Nine Azas silver one drachma do each 3 Rs. Rs. 27.
One Do Copper Rs. 3.
One Azilizas silver one drachma
One Do Copper good.
One Do Copper good.
One Manas silver one drachma do good valuable Rs. 3.
One Do. Elephant's head caducens
One Uncertain Silver one drachma Rs. 3.
One Ippostratos Silver tetra-drachm good Rs. 12.
One Do do do Rs. 20.
One Do do do very good. Rs. 12.
One Antialkeedas do Rs. 3.
One "Senatus populus-que Romanus" Rs. 3.
Three Barbarous do.
One Judo—Mohomendun silver Rs. 2½.

GOLD.

One Kikorano large gold Rs. 36.
One Russian (seemingly small gold) Rs. 10.

9326 Seventy-three Copper Coins.
Forty-two do
Nine gold do
} names unknown

---

C. H. Browne, Esq., Exhibitor.

8405 Three Samples of Stick Lac with specimens of Lac dye, Shell Lac and Seed Lac prepared from each.
8406 One Sample of Banda Cotton.
8407 One do of BORAX.
8408 One do of Pure Tincal.
8409 One do of Iron ore.
8410 Two do Coal from Padree mine.
8411 Two Carpet Rugs made at Mirzapore.

# CEYLON.

## E. Rawdon Power, Esq., Exhibitor.

2320 One parcel containing a variety of articles from the Royal Botanee Gardens Peradenia near Kandy.
2321 One Kandyan mat.
2322 One Ivory Elastic Tube or bottle.
2323 One Bark Bag used by the Kandyans to carry paddy &c.
2324 One Ivory Dagoba.
2325 One Small box of Ceylon Pearl Oyster shells of different ages.
2326 One Carved Cocoanut shells
2327 One Ivory figure of Budhao.
2328 Three Kandyan canes
2329 Two Small Kandyan Priests fans.

---

## Miss Eliza Agnew, Contributor, made by the Girls' in the American Mission, Boarding School, at Jaffna.

### Anti-Macassars, made of Jaffana Cotton.

| | | | | |
|---|---|---|---|---|
| 5292 | Queen Victoria Pattern | made by | Edna S. Newell | Rs 7. |
| 5293 | Prince Albert | do | do do do | Rs. 7. |
| 5294 | Uncle Tom and eva | do | Mary Raymond | Rs. 7. |
| 5295 | My Pet | do | Edna S. Newell | Rs. 7. |
| 5296 | Wild Flower | do | Susan Kiltnedge | Rs. 7. |
| 5297 | Lord Nelson | do | Anna Ross | Rs. 8. |
| 5298 | Puss | do | Mary Odiorne | Rs. 6. |
| 5299 | Abraham | do | Eunice Payson | Rs. 5. |
| 5300 | Gnapevine | do | Sarah L. Dodd | Rs. 6. |
| 5301 | Daniel | do | Augusta Duffield | Rs. 7. |
| 5302 | Puss | do | Jane Danrers | Rs. 5. |

### Anti-Macassars, made of English Cotton.

| | | | | |
|---|---|---|---|---|
| 5303 | Lord Nelson Pattern | As. 9. | | |
| 5304 | Duke of Wellington | do | B. King. | Rs. 9. |
| 5305 | Wetroom sweet babe | do | B. King. | Rs. 2. |
| 5306 | Cheque Work | do | B. King. | Rs. 4. |
| 5307 | Splendid Peacock | H. Holdemn not for sale. | | |
| 5308 | One Rack Crystal Stone | Rs. 2000. | | |

# CHINGLEPUT.

Assistant Surgeon J. Ratton, Exhibitor.

GUMS.

487 Margosa Vapumarum (plentiful.)
488 Moringa (plentiful.)
489 Vayngie Marum.
490 Do (a Smaller Tree with thorns)
491 Pumplemose.
492 Wooddia Marûm.
493 Kattoowally (plentiful.)
494 Karroovelum. Gum Arabic Tree. (Indian) used by the Natives for Toothache and strengthening the gums.
495 Povelum. Said to be plentiful in other parts of the district.
496 Mango Tree.
497 Kattoo Mangoy (plentiful.)
498 Mareemangoy. A very clean gum exudes plentifully from the Tree—but not many trees in this neighbourhood.
499 Cotton Tree large.
500 Vullum Marum (Wood apple.) Gum Arabic country (plentiful)
501 Cottee Vullan Plentiful—equal to the country gum Arabic.
502 Vanday Narainay Marum. In small quantity. The Bark purgative.
503 Pinnay Marum (plentiful) Gum Risen.
504 Nella Moorookay. Very astringent—used by the Natives in Diarrhœa. A Jungle Tree. (Resin much like Rins.)
505 Orange Tree.
506 Avathy Marum. Very astringent, used by the Natives in Diarrhœa. Obtained only in small quantity. (Gum Resin)
507 Covalay Marum. Very fine gum.
508 Avaray. Collected from the root, scarce—very cooling much esteemed by the Natives in heat of the body and and Gonorrhœa. (Gum Resin)
509 Elandie Marum.
510 Moondri Marum.
511 Kallinore.
512 Pana Marum.
513 Thoombeeree Marum.
514 Sarancottay.
515 Kattoopachalum.
516 Kattoopoorsan.
517 Cumbee. Resin does not dissolve in water, exudes from the leaves obtained only in small quantity a small quantity only exuding on the points of the buds. A shurb 4 feet in height; leaf like the Guava. Applied to the head for headache. A good scent when burnt dry over on Iron.
518 Vilvay Marum. The tree resembles to wood apple tree. The fruit very astringent; used for Diarrhœa. It has small sharp thorns over its branches.
519 Paderee. A high tree, branches like the Silk Cotton, leaves ash coloured.
520 Pareeya. A good gum; a large jungle tree.
521 Vunnee. A large and small jungle tree.
522 Karooncauley. A large jungle tree.
523 Thillay. A large Tree, exudes as milk; very stimulating—especially when fresh—it excoriates the part applied to and blister it. Good in Rheumatism, but diluted with Oil.
524 Samparoothee.
525 Cuddulpungun. A large jungle tree. Grows near the sea shore.
526 Paroollaw. A large jungle tree.
527 Thanee. Used for Dysentery.
528 Marooday. Do.
529 Chellumba. Used for Medical purposes.

FIBRES.

530 Kattookathalay.
531 Bramarakhasi.
532 Seemay kathalay.
533 Yercum Madar.
534 Pana.
535 Talay.
536 Valay.
537 Annasee.
538 Taynga.
539 Sapatoo.
540 Kaserika.
541 Narroovallay.
542 Vittie Vayr.
543 Payr Eatchum.
544 Kacah poondoo.
545 Kachpoondoo.
546 Murrell Muttay.
547 Thoothee.
548 Paklay.
549 Valei Tundoo.
550 Koorinjah.

IRON ORES.

551 Central part of a large Natural Magnet the Poles being in its transverse diameter.
552 Massive Oxydulous Iron Ore Magnetic with Polarity very rich.
553 Oxydulous Iron Ore with Manganese Magnetic with Polarity Valuable the best Iron for making steel.
554 Iron Ore and Manganese generally termed Iron Slag.
555 Talc in Quartz and Clay.
556 Straw Platting.
557 Payr Eatchum.
558 Saday Shola.
559 Vurrell Vittie Vayr.
560 Arisee.
561 Panna.
562 Taylay.

Assistant Surgeon J. Ratton, Exhibitor.

SAMPLES OF COTTON.

563 Yercum or Mudar.
564 Ootahmenay or Cotrum.
565 Mudar Cotton, and country equal parts.
566 Thread from the same.
567 Silk Cotton, and Country Cotton equal parts.
568 Thread from the same.
569 Mudar Cotton Silk Cotton, each 1 part Country Cotton 2 parts.
570 Thread from the same Table napkins.
571, 572 Damask and Birds eye patterns.
573 Four samples of Mudar, and Silk Cotton.
574 Thread Mudar Cotton and Silk Cotton equal parts.
575 Samples by weight, from a single Pod of Mudar, Silk and Country Cottons.
576 A Silk Cotton Pod.

COTTON.

577 Sample of filaments from the Stem of the "Nelumbium spocio'sum" or the sacred Sawmery Plant.

---

Bava Saib Exhibitor.

WET GRAINS.

578 Soogathasoo Paddy.

---

Paupy Reddy Exhibitor.

579 Seveem Sumbah.

Putchayappa Moodelly, Exhibitor.

580 Thooyamullee Sumbah.

---

Comarasawmy Moodelly, Exhibitor.

581 Chinna Sumbah.

---

V. Streenevasa Iyengar, Exhibitor.

582 Seroomane Sumbah.

---

Venkata Reddy, Exhibitor.

583 Codum Sumbah.

---

Kristnama Charry, Exhibitor.

584 Palun Sumbah.

---

Coomarasawmy Moodelly, Exhibitor.

585 Manavary.

---

Chingulput Reddy, Exhibitor.

586 Vadacathee Sumbah.

Narayana Naick, Exhibitor.

587 Kaloovan Sumbah.

---

Bava Saib, Exhibitor.

588 Peroom Sumbah.

---

Venkoovier, Exhibitor.

589 Mosonum.

---

Cundasawmy Moodelly, Exhibitor.

590 Cooroomben Sumbah.

---

Nynatha Moodelly, Exhibitor.

591 Nereemeleeso Sumbah.

---

Iyasawmy Pillay, Exhibitor.

592 Morun Sumbah.

---

Nullatha Moodelly, Exhibitor.

593 Bangalore Sumbah.

---

Tandavaroya Moodelly, Exhibitor.

594 Pochaly Paddy.

---

Ragaviengar, Exhibitor.

595 Vellakoor Sumbah.

---

Patchayappa Moodelly, Exhibitor.

596 Cavoo Paddy.

---

Venkoovier, Exhibitor.

597 Manacatha Paddy.
598 Pichavery.

---

Sutteanatha Butten, Exhibitor.

599 Paroonkar.

---

Ragava Charry, Exhibitor.

600 Vellamanakatha Paddy.

---

Vencatarama Pundit, Exhibitor.

601 Mocttacar.

---

Abba Saib, Exhibitor.

602 Elooppapoo Sumbah.

Veerasawmy, Exhibitor.
603 Sumbala Paddy.

Vencatachella Pillay, Exhibitor.
604 Canacum Sumbah.

Vencatachella Moodelly, Exhibitor.
605 Seeroo Moosanum.

Moottoosawmy Naick, Exhibitor.
606 Cadoo Calathan.

Aroonachella Chetty, Exhibitor.
607 Palavay Sumbah.

Vencatachella Naick, Exhibitor.
608 Poongar.

Ramanooja Iyengar, Exhibitor.
609 Arinjothee.

Coopoo Gounden, Exhibitor.
DRY GRAINS.
610 Thanay Grain.
611 do

Ramakistna Iyer, Exhibitor.
512 Shama Grain.
613 Cooroovaroogoo.

Soobbier, Exhibitor.
614 Vellavaroogoo.

Veerasawmy Moodelly, Exhibitor.
615 Varoogoo.

Coopoosawmy Iyer, Exhibitor.
616 Parooncumboo.

Streenevasa Vardacharry, Exhibitor.
617 Pottoo Cumboo.

Paupy Reddy, Exhibitor.
618 Cumboo.

Rungasawmy Moodelly, Exhibitor.
619 Caroonsoorootty Raggy.

Vathachella Moodelly, Exhibitor.
620 Velly Soorootty Raggy.

Paupy Reddy, Exhibitor.
621 Yellow Cholum.

Davunnun, Exhibitor.
622 Red Cholum.

Soobroya Gounden, Exhibitor.
623 Alunkara Cholum.

Davunnun, Exhibitor.
624 Green Gram.
625 Black Gram.
626 Bengal Gram.
627 Toolooka Gram.
628 Horse Gram.
629 Caramany Gram.
630 Mochacottay Gram.

Comarasawmy Moodelly, Exhibitor.
SEEDS.
631 Gingely oil seeds.
632 Lamp oil seeds.

Veerasawmy Reddy, Exhibitor.
633 Elooppa seeds.

Ramanatha Moodelly, Exhibitor.
634 Dholl Gram.

Davunnun, Exhibitor.
635 Oolundoo.

Moothun, Exhibitor.
636 Grass Rice.

Narasimma Naick, Exhibitor.
637 Flat Red Beads.

Soondarier, Exhibitor.
638 Indigo seeds.

Rajunnen, Exhibitor.
639 Brimmathundoo seeds.

Moothun, Exhibitor.

640 Ally seeds.

Cundapa Naick, Exhibitor.

641 Margosa seeds.

Narasimma Exhibitor.

642 Round Red Beads.

Patchayappa Moodelly, Exhibitor.

643 Cotton seeds.
644 Chillies.

Vadachella Moodelly, Exhibitor.

645 Pinnay cottay seeds.
646 Yettee seed.

G.Chengunnah Sastry,Exhibitor.

647 Avoottee seeds.

Moothun, Exhibitor.

Gums.

648 Margosa.
649 Wild apple tree.
650 Mooroonga tree.
651 Mooroocan tree.
652 Othea tree.
653 Baubool tree.
654 Lime tree.

Ragava Charry, Exhibitor.

655 Sealing wax.

Ragava Naick, Exhibitor.

656 Mango tree.
657 Wood apple.

Patchayappa Moodelly,Exhibitor.

Oils.

658 Lamp
659 Gingelly.

Cundapah Naick, Exhibitor.

660 Margosa.

Patchayappah Moodelly,Exhibitor.

661 Elooppa.

Rajannun, Exhibitor.

662 Dittora oil.

Yanadies, Exhibitor.

Dying Materials and Medical Roots.

663 Auvarum.

Esmaiel Khan, Exhibitor.

664 Chembooranputtay.

Yanadies, Exhibitor.

665 Chey root.
666 Easwara root.
667 Sarsaparilla.
668 Vishabootthy.
669 Soorool cheecay.

Moothun, Exhibitor.

670 Cuscus.

Teroovengada Moodelly, Exhibitor.

671 Mooloocarany root.

Moothun, Exhibitor.

672 Corakilungoo.
673 Cattoo Caranay.

Sashadry Iyengar, Exhibitor.

674 Turmeric.

Veerasawmy Iyengar, Exhibitor.

675 Chapunkelungoo.

Oosman Khan, Exhibitor.

676 Ahcasagaroodun.

Moothun, Exhibitor.

677 Boochuckra.

Anuntha Charry, Exhibitor.

678 Amookoonakelungoo.

Comarasawmy Moodelly, Exhibitor.

679 Thunnymoottan kelungoo.

---

Valayootha Moodelly, Exhibitor.

680 Maroovun kelungoo.

---

Moothun, Exhibitor.

681 Palmira kelungoo.
682 Paroon kelungoo.
683 Norah root.
684 Chittra Moolum.
685 Conjee root.

---

Oosman Kahn, Exhibitor.

686 Vuttatheroopee.

---

Appasawmy Moodelly, Exhibitor.

687 Pambookelacoy.

---

Moothun, Exhibitor.

688 Chengum root.
689 Poonacanjee root.

---

Teroovenguda Moodelly, Exhibitor.

690 Chitta Mootty.
691 Para Mootty.

---

Veerasawmy Moodelly, Exhibitor.

692 Nelavemboo.
693 Nunjee Moorithun.

---

Moothun, Exhibitor.

694 Poonul Thundoo root.

---

Thandavaroyen, Exhibitor.

695 Vurtungee root.
696 Vistungee root.

Moothun, Exhibitor.

697 Carevaluncoy.

---

Teroovangada Moodelly, Exhibitor.

698 Mooroola root.

---

Anuntha Charry, Exhibitor.

699 Nellapanum kelungoo.

---

Oosman Khan, Exhibitor.

700 Sevanoo kelungoo root.

---

Comarasawmy Moodelly, Exhibitor.

701 Wild onions.

---

Moothun, Exhibitor.

702 Thaleecodoocookoy.

---

Moothun, Exhibitor.

Roots.

703 Colloocavady.

---

Ootoocathan, Exhibitor.

704 Cattoo carany.
705 Savere palum.

---

Wijoonan, Exhibitor.

706 Fig fibres root.

---

Abdool Cawder, Exhibitor.

707 Sattana root.

Kistnen, Exhibitor.

708 Chouri root.
709 Oosiyellacoody.
710 Adundum.
711 Neermullee.
712 Red Mollana.
713 Thootivare.
714 Codoocapulle.
715 Mangavaputta.
716 Rattan Root.
717 Ootamany.
718 Belvavaroo.
719 Mooroocum.
720 Tooloocuttan.

---

Moothun, Exhibitor.

721 Modacathan.
722 Canjancoray.
723 Thoodoovuttee.

---

Dasen, Exhibitor.

724 Moosee Moosee.

---

Moothun, Exhibitor.

725 Catta Amencan.
726 Mookarata.
727 Yettee.
728 Caladapaul.
729 Nochilli.
730 Colloocavada.
731 Cautoovelli.
732 Thagara.
733 Maracallan.
734 Tholasee.

---

Ponnun, Exhibitor.

735 Mooccatar.
736 Munjum grass.
737 Varamoollee.
738 Veloodi.
739 Caringumba.
740 Velaver.
741 Pyreemoolli.

---

Ootoocathan, Exhibitor.

742 Keelanellee root.
743 Vella yarkan.
744 Wishnoo Cranthi.
745 Vella Sarvalla.
746 Kela root.
747 Nayaroovi.
748 Vaniumt.

---

Dasen, Exhibitor.

749 Oralla Thambara root.

---

Ponnun, Exhibitor.

750 Seeroocoorinjan.

---

Kistnen, Exhibitor.

751 Panum.
752 Grass.

---

Paupy Reddy, Exhibitor.

FIBRES.

753 Palmira.
754 Hemp or Cachekooca.

---

Ponnun, Exhibitor.

755 Thalum.

---

Streenevasa Iyengar, Exhibitor.

756 Goja fibres.
757 Cocoanut fibres.

---

Mooneappa Chetty, Exhibitor.

758 Januppa.

---

Ramun, Exhibitor.

AGRICULTURAL IMPLEMENTS.

759 Wood chopper.
760 Sickles.

Narain Chetty, Exhibitor.

EARTHS, &c.

761 White Clay.
762 do do Mould.
763 Pipe Clay.
764 Bangles (earthen)
765 Green Clay Mould.

---

Sashachellum, Exhibitor.

MANUFACTURES.

766 Square Bricks.
767 do do 2nd sort.
768 Well Bricks.
769 Black stones.

---

Soobramanea Achary, Exhibitor.

NATIVE HOUSEHOLD UTENSILS.

770 Bronze Goglet.
771 do Cups.
772 Brass Lamps.
773 Bonze Tumball.

---

Tandavamoorty Moodelly, Exhibitor.

CLOTHS.

774 Man's Cloth.

---

Rungappa Chetty, Exhibitor.

775 Woman's lace cloth.

---

Vurduppa Chetty, Exhibitor.

776 Woman's Black cloth.

---

Vencatarama Chetty, Exhibitor.

777 Woman's Black cloth.

---

Moonesah, Exhibitor.

778 Woman's lace Cloth.
779 Muslins.
780 Threads of different colours.

---

C. Runga Charloo, Exhibitor.

781 Man's Cloth.

Streenevasa Iyengar, Exhibitor.

MANUFACTURES.

782 Hempen ropes.

---

Putcheappah, Moodelly, Exhibitor.

783 Palmira rope.

---

Streenevasa Iyengar, Exhibitor.

784 Cocoanut Fibre rope.

---

Mooneappah Chetty, Exhibitor.

785 Gunnes.

---

Salar Saib, Exhibitor.

786 Mat 1st sort
787 do 2nd do
788 do 3rd do
789 do 4th do

---

Cauder Saib, Exhibitor.

HORNS, SKINS.

790 Tanned Skins

---

Meera Pilla Lubbay, Exhibitor.

791 Tanned Skins.
792 Bisons Horns.

---

Vencata Reddy, Exhibitor.

MISCELLANEOUS PRODUCTS.

793 Palmira Jaggery.

---

Patcheappa Moodelly, Exhibitor.

794 Cane Jaggery.

---

Paupy Reddy, Exhibitor.

795 Indigo.

Aroomooga Moodelly, Exhibitor.

796 Salt.

Comorasawmy Moodelly, Exhibitor.

797 Cotton.

Patcheappa Moodelly, Exhibitor.

798 Tobacco.

Yanadies, Exhibitor.

799 Honey.

Runga Charloo, Exhibitor.

800 A collection of samples of Paddy and Dry Grains.
801 A collection of gums from different trees.
802 A collection of earths and Rocks.
803 A collection of roots and herbs.
804 A collection of Medicines used by Native Doctors.

Mr. Fitzgerald, Exhibitor.

805 Tripple plough.

Aroonagery Achary, Exhibitor.

806 Model of Water Pump.

Appavoo, Exhibitor.

807 Specimens of Pottery.

Moonesawmy Chetty, Exhibitor.

808 Palumpore.
809 Handkerchiefs.

Runga Charloo, Exhibitor.

810 Collection of dying materials.

Mr. T. Brass, Exhibitor.

811 Coffee.

Runga Charloo, Exhibitor.

812 Indigo.

Mr. Fitzgerald, Exhibitor.

813 Merino wool.
814 Cotton.

Armooga Moodelliar, Exhibitor.

5308 Merino wool, ash colour.
5309 Do. Yellow

OILS.

5310 Oils extracted from Pinnay seeds.
5311 Poongum.
5312 Ground nuter Vercadali.
5313 Cocoanut.
5314 Elooppa.
5315 Gingelly.
5316 Margosa.
5317 Honey.

SEEDS.

5318 Poongum cottay.
5319 Pinna cottay.
5320 Moonderi.
5321 Red beads.
5322 Bromadundi.

GUMS.

5323 Moonderie.
5324 Margosa.
5325 Wood Apple.
5326 Mooroonga.
5327 Malavelungum.
5328 Culnar or mineral substance.
5329 White sand.
5330 Black sand.
5331 Plaster of Paris.
5332 Chittian Rock.
5333 Paramootti Root.
5334 Chittamootti do.
5335 Tunnimoottan kelungoo do.
5336 Paroon kelungoo do.
5337 Amookoonan kelungoo do.
5338 Nelapanun kelungoo do.
5339 Chittramoolum do.
5340 Saraparilla do.
5341 Cuscus do.
5342 Sembooram Book.
5343 Cocoanut fibres.
5344 Ahthy do.
5345 Naroovaly do.
5346 Hemp do.
5347 Thauly do.
5348 Palmira do.
5349 Aloe do.
5350 Cocoanut with fibres.
5351 Large Cocoanuts without do.
5352 Small do do.
5353 Cocoanuts Jaggery
5354 Palmira Rope.
5355 Earths Red.

POTTERY.

5356 Flour Pot.
5357 do do.
5358 do do.
5359 do do.
5359½ do do.

## W. Dowdeswell Esq., Exhibitor.

8004 1 Large Loom.
8005 1 Warping Machine.
8006 Damask Table Cloth 7 feet Rs. 4.
8007 ½ Dozen fine Towels at 4 Rs. per Dozen Rs. 2.
8008 Birds Eye Table Cloth 9 feet Rs. 5 each.
8009 Course Towels ¼ Yards by 1 Yard at 6 Rs. per dozen.
8010 Bengal Pattern, Towels 1¼ by 1 Yard at 6 Rs. per dozen.
8011 16 Inches Birds Eye Napkins at Rs. 1-2 per dozen.
8012 19 Inches Damask Napkins at Rs. 1¾ per dozen 1¼
8013 20 Inches Damask Napkins at 2¼ per dozen 2¼.
8014 22 Inches Birds Eye Napkins at Rs. 2¼ per dozen.
8015 10 Yards of Blue Drill at 8 Annas per Yard 10-3¼.
8016 12 Yards of Blue Checked Drill at 8 Annas per Yard.
8017 Damask Table Cloths 7 feet square at Rs. 4 per each.
8018 Birds Eyes Table Cloth 9 feet square at 5 Rs. each.
8019 Bengal Pattern Towel ¼ a dozen at Rs. 6 per dozen.
8020 Course Towels 1¼ Yard by 1 yd. at Rs. 6 per dozen.

PLATFORM SCALE COMPLETE.

8021 Fine Towels at Rs. 4 per dozen.
8022 Birds Eye Napkins at Rs. 1-2 per dozen.
8023 19 Inches Damask Napkins at Rs. 1 per dozen.
8024 20 Inches Damask Napkins at Rs. 2¼ per dozen.
8025 28 Inches damask Napkins at Rs 2¼ per dozen.
8026 20 Inches Birds I Eye Napkins at Rs. 2¼.

FIBRE ROPES.

8027 ½ Yards of Plush fibre.
8028 ¼ do do do.
8029 6½ do do do.
8030 ¼ Yards of the case fibre.
8031 1 Common aloe Rope.
8032 2 Imitation Rope.
8033 do do.
8034 do do.
8035 Imitation Rope.
8036 do do.
8037 do do.
8038 do do aloe fibre prepared.
8039 do do raw material.
8040 10 Plantain
8041 11 Rope of aloe fibre.

FIBRES.

8042 Rosold fibre.
8043 Forero, a Gigantin Farcroyd Gigastea
8044 Plantain Fibre.
8045 Aloe do.
8046 40 Rolers with thread for working machine.
8047 10 Small Rolers for Thar Coorchie and Nadah.
8048 1 Iron Wrench.

## Local Committee, Exhibitors.

8049 Soap nut.
8050 Saltpetre.

## J A. Ratton Esq., Contributor. Manufactures Exhibitor, Messrs, Thresher and Glanny, London.

8051 Blue Tweed.
8052 Grey do.
8053 Light Grey do.
8054 Red do.
8055 White do.

## Ramasawmy, Exhibitor.

8701 Silk thread yellow colour 3 Pols Rs. 1-11.
8702 Do. do Red do 2¼ Pols. Rs. 1 As. 4-3.
8703 Do. do White do do Rs. 1 As. 4-3.
8704 Do. do Green do do As. 2 3.
8705 Do. do Black do ¾ Pols. Rs. 6 As. 10.

## G. Narrainasawmy Chetty, Exhibitor.

8706 Thread died with red colour by Cheyroot 8 Pols. Rs. 2.
8707 do do by nonali root 7 Pols. Rs. 1-2
8708 do do by Indigo 8 Pols. Rs. 1.
8709 do do Green Colour 8 Pols. As. 1.

## Sabapathy, Exhibitor.

9028 Brazier Rs. 28.

# CHINGLEPUT.

## DR. RATTON OF CHINGLEPUT IN FORWARDING SAMPLES OF COTTONS, FIBRES, ETC. REMARKS AS FOLLOWS.

I have herewith the honor to forward you, as per List attached, certain samples of Cotton and Cotton thread, the produce of the "Calatropis Gigantea"—together with correspondence relative to this produce, with Messrs. Thresher and Glenny, the well known London Outfitters, and hosiery, Manufacturers. The above samples being duplicates of those forwarded at the request of the Firm to their address by the present Overland Mail.

It will be in your recollection Sir, as well as that of the Right Honorable the President, that I first exhibited this Cotton at the Agricultural Exhibition—held at this Station in April last. Impressed then with the value of this neglected material, and confirmed in my own views by your notice of it—and the notice of the Right Honorable the Governor—I lost no time in sending a small sample through my Brother to Messrs. Thresher and Glenny; the result of which is their very satisfactory letter now before you, accompanied by an order for 25 lbs. of the Raw Material, and 3 lbs. of it variously spun. The lively interest which these Gentlemen express in using their best endeavours to develope the capabilities of this material, leaves nothing to wish for on that score; and renders certain that its commercial value will in their hands be brought to the test of experiment. It is also most gratifying to myself that I have secured their co-operation, and will, I believe, be equally so to the Committee. It will likewise be observed that by the accompanying samples I afford the Committee the guarantee of its being a produce likely to become of much commercial value, and it will remain for the Committee to endeavour to procure its due development in this country, in time to place their results at the forthcoming Exhibition beside those which will be received from Messrs. Thresher and Glenny.

It might have suggested itself to me as a matter for prudent consideration, whether I should now address you these limited, though truly gratifying results, or using the privilege of reserving till a later period, the knowledge I had acquired, secure to myself more time for further quiet experiment, and appear to greater advantage as an Exhibitor in 1857. By the former course I believe I have chosen that which will more nearly meet the wishes of the Right Honorable the President and Committee, which is doubtless, that the greatest publicity should be given to every matter which, like the present, promises to become a new source of produce, and manufacture, and thereby afford an opportunity for that very competition, which is so desirable to elicit the resources of the country, and is indeed one of the chief ends of these Exhibitions. To this end I have moreover placed myself in communication with an eminent Cotton Manufacturing Firm at Pondicherry —and have availed myself of the kind permission of the Judge at this station, to use the Looms for trials of this material; which has afforded me the immediate opportunity of so far testing its value, as we see it exhibited in the accompanying sample of Table Napkins. I would now suggest that it would be very desirable for Collectors to be requested to lend their aid to make this material known in their respective Districts, and to encourage Native Manufacturers to experiment with it, in view to sending their results to the Exhibition, and probably it would be convenient that they should be furnished with a copy of this communication, and its accompanying correspondence, for their information.

I do not consider it necessary to make this a lengthy communication by dwelling much upon the plant; but will rather, to avoid repetition, direct attention to what I say of it in my letter to Messrs. Thresher and Glenny adding only a few words respecting some of its more striking features —leaving to yourself Sir, who are so eminently qualified, to give a practical working to what I have now only the honor to lay before you.

The "Calatropis Gigantea," Mudar of Bengal, or Yercum of this Presidency, is a plant too common and too well known to require from me a special description—yet we must now in reference to its heretofore totally neglected Cotton, view it in that light in which it will probably, for the

MADRAS, C. E. S. PRESS—D. P. L. C. CONNOR, PRINTER.

future, stand as an adjunct to the staple manufactures of this country—and thus seek to ascertain so far as our imperfect information for the present admits of, what may be its probable commercial value in view to its cultivation, should the results of these first experiments, as we anticipate seeing them at the Exhibition, render this desirable. It arises in a clump, from several stems, numbering in a healthy full sized plant from 15 to 20, and attains in this part of the country a height of 4 feet. These stems are dichotomous, separating, and again subdividing into from 60 to 100 shoots, which within a few inches of their extremities give off 5 or 6 collections of blossoms affixed to a common foot stalk—the whole forming a compound flower head. Each of these separate collections of blossoms averages from 20 to 30—so that the whole flower head on each stem may be seen covered with from one to two hundred blossoms. It is not of course to be inferred that these all reach to maturity—on the contrary a great part wither and fall off. Still it is evidently extremely prolific. Such a plant presents a mass of flowers from 300 to 400, bearing from 6,000 to 10,000 blossoms; and covers a space of about 5 feet square. It is perennial, and to be seen the year round covered with blossom and fruit. The fruit is a pod, which dehisces as it ripens, letting fly out the cotton like substance attached to and carrying with it the seeds. A ripe pod yields an average weight of 17 grains of cleaned cotton—which is the same weight as is yielded by the pod of the "Gossypium herbaceum, or Indicum." The common Cotton of India—that used in these experiments. The pod of the "Bombax pentandrum" or silk cotton yields one and a half dram or 90 grains.

On dehiscence of the fruit pods, the seeds from 200 to 300 in number are seen when thus ripened of a dark or nearly black colour lying together with their hairy attachments in two lateral bundles, appressed, overlapping each other in regular curved rows, the same as bracts in the fir cone. They are adherent through their hairy attachments to a central placenta, from which under the action of the sun's rays as their moisture becomes evaporated, they become disengaged, and are thus in bundles wafted through the air in snowy flakes, to disseminate themselves throughout the country. The pods are necessarily gathered just before they open. When ripe and strewn in the sun, they open within an hour or two. This is hastened by touching them occasionally with the hand.

This plant requires no particular soil. It is seen growing on sandy, stony, poor, and waste lands; on the road sides, old walls, ramparts, ditches, and every piece of ground where it is permitted to grow: for viewed as a useless plant, it is every where cut down, when the land is required for cultivation. It is also met with in rich soil, such as the ridges and corners of paddy fields. It thrives in the Mysore country, as I was particularly struck with its great size and luxuriant appearance, seen growing on the road sides.

One striking advantage relative to this plant, should it become a subject of future interest for the Manufacturer—is, that all waste lands become thus available for its growth. In this very district—miles of waste land, common, by the hill sides, and around the tanks, could be thus rendered available. It is indeed questionable if there is another plant in India that would grow with less trouble, not to dignify it with the term of cultivation. After being planted out, it would require no further attention. It can be propagated by cuttings, or roots; or by the seed, as it so plentifully propagates itself. It would almost seem indestructible, for nothing but rooting it out will destroy it. Within a week after being cut down, it is seen growing up again, and if undisturbed for 2 months, will be as strong as at first, bearing both blossoms and fruit. From what I have been able to observe of this plant, I am inclined to believe that it would thus grow to maturity 4 times during the year, were it as frequently cut down. This may have a bearing also upon its value, as regards the bark, for its fibres, as a material for cordage as now employed, or at a later period possibly for weaving cloth. What might be the effect of cultivation properly so called, of the plant, as respects the size of its fruit, and the length and strength of its staple, yet remains for experience to determine. Were we to judge from analogy, we observe that cotton is greatly modified by soil, climate, and culture—so that the same cotton which produces a long and fine staple in one soil—removed to an inferior one, is found to become so altered, as not to become identified as the same. These remarks may afford for the moment data upon which to form some idea as to its growth, and productiveness, utility of cultivation, and cost of produce, compared with Cotton. This is a wild plant, that does not look for moisture—Cotton requires a good soil, and irrigation. Hence it may it would seem be profitably introduced as an adjunct to Cotton.

I also beg to direct the attention of the Committee to the samples of Silk Cotton.

One great advantage which presents itself in these early experiments, is the ascertained fact, that two new materials, are now introduced into useful manufacture, the Mudar, and the Silk cotton. The latter, as the Committee are aware, has up to the present been used only for stuffing

pillows, couches, &c. It is here shewn to be capable of being spun when mixed with equal parts of cotton, into a useful thread. Sample No. 2, or mixed in other proportions with it and Mudar cotton, seen in sample No. Even these two materials mixed in equal proportions, become capable of being spun into a thread that permits of being wove in the weft, seen in samples No. 4, though too weak to be practically useful for manufacturing purposes without some mixture of cotton, as shewn in the proportions, sample No. 3. The remarks in my letter to Messrs. Thresher and Glenny prevent the necessity for further details on this point.

I beg now to request the kind attention of the Committee to that part of my letter to Messrs. Thresher and Glenny, in which I mention in reference to their praise-worthy endeavours to get ready in time for the Exhibition, some specimens of their manufacture from this material—that I purposed to suggest to the Committee in order to afford them the latest practicable date, to name the 10th January as the latest date at which articles from Europe can be admitted to compete for Prizes. I beg, with reference to this, also to direct attention to the favourable opinion of this material expressed by Mr. Smyth of Dublin—and Mr. Appleyard of Balbriggan—both well known Hosiery Manufacturers, as mentioned in the attached Extract of a letter received by the last Mail. I also attach a List of Samples despatched to them by the present Overland Mail. From their remarks, I am led to believe that specimens of their manufacture from this material may likewise be looked for, if time is allowed them. I will also request to be favored with one or more copies of Rules for transmission to these parties—and any other information you may consider would be acceptable to them.

I feel happy to think that in passing through your hands—the subject will meet with the great advantage derivable from your scientific acquirements—and I feel aware that in asking of you the favor to subject it to microscopical examination, the Committee will have no cause to regret my not having such an Instrument by me.

The filaments from the stem of the "Nelumbium Speciosum"—now sent as a specimen—may at a later date, when I shall have further tested their capabilities, and ascertained the opinion of Messrs. Thresher and Glenny, become the subject of future communication.

---

VIA MARSEILLES.

JAMES RATTON, ESQ.

*Surgeon in the East India Company Service, Chingleput,*

*Madras Presidency.*

LONDON, 152 STRAND, *June 24th*, 1856.

SIR,

We have examined the sample of "Calatropis Gigantea" and we will do our best to manufacture it, if you will oblige us with the quantities ordered on the other side—or if not to be immediately obtained—send any quantity you can (if only one pound) by the Overland Mail, as we are really anxious to get some samples made for the Madras Exhibition. We shall be very happy to pay for the quantity ordered, and will make all the experiments at our own expense. It will however be very necessary to ascertain the price at which the material can be produced in the different States, and therefore we will thank you to send an invoice by the same Mail of all that is sent.

From the small sample we have seen the staple appears very short, and consequently will scarcely be sufficiently strong, without some mixture of Cotton or Silk—the latter, we think, would be the best—say about one-fourth or fifth of Cotton or of Silk. If spun by the hand, it will most likely retain much of that fine silky appearance; but if spun by machinery the silky appearance will most probably be lost. The Natives, we believe, are in the habit of spining or throwing it by the hand—and they can most likely mix it with cotton or silk, and thus make a much stronger threa , and we should like samples of each. If the natives can spin it into a good fine thread at a mode rate cost it would be better to have it at once in that state; but upon all these matters we will rite more particularly when we have tried the samples. Immediately we receive the material we will put it in hand and forward you the results.

We have the honor to remain,

Sir,

Your obedient Servants,

(Signed) THRESHER & GLENNY.

The following to be forwarded by Overland Mail, as quickly as possible, to Messrs. Thresher & Glenny, 152 Strand, London.

25 lbs. clean from the Pod same as the sample received.
1 lb. or about that quantity of the same very loosely spun or thrown into a fine thread—but not hard twisted.
1 lb. the same, but mixed with about one-fourth or fifth of Cotton and spun or thrown into a fine loose thread.
1 lb. same, but mixed with silk instead of Cotton.

P. S. We shall feel obliged if you will send us word the latest date at which we can send samples for the Madras Exhibition—and any papers of Rules, &c. connected with the Exhibition.

True Copy.

CHINGLEPUT,
13*th August*, 1856.

J. RATTON,
*Zillah Surgeon.*

*Address.*

To

MESSRS. THRESHER & GLENNY,
152 STRAND, LONDON.

---

CHINGLEPUT, 9*th August*, 1856.

DEAR SIRS,

I had the pleasure to receive by the last Overland Mail, viâ Marseilles, your very obliging letter of the 24th June, relative to the Cotton from the "Calatropis Gigantea"—a sample of which I forwarded to you through my Brother Mr. Joseph Ratton, for your inspection and report.

The liberal and active manner in which you have met the wish to ascertain the capabilities of this new material, leaves me nothing further to desire, as I feel confident that at your hands it will meet with every advantage which science, and experience, aided by the best machinery can bring to bear upon a development of its capabilities. I have lost no time in responding to your wishes by at once collecting and preparing what quantity I could in time to forward to you as you requested by the present Overland Mail; though I could not procure the amount you required. The quantities are specified in the accompanying List of samples. I also send you three new materials, upon which I desire to be favored with your opinion. The fibres obtained from the inner bark of the Mudar, have up to the present been used only for making ropes and cordage—these are of excellent quality—and I believe esteemed stronger than cordage from any other fibre. I now send this sample to you under the impression that they admit of being manufactured into some useful fabric, possibly somewhat similar to Grass cloth.

It will be gratifying to you to know that I had the honor to lay your letter before the Right Honorable the Governor; who is the originator of these Exhibitions in this country, and takes a lively interest in every thing that tends to develope its resources; together with samples of the Mudar Cotton, by itself, and mixed with Cotton, and silk Cotton; the same as the 5 samples I send you, as well as a small sample of each of the 3 wefts here named. I likewise purpose to submit a copy of your letter, together with duplicates of the above samples, and a short report upon the "Calatropis Gigantea," to the Committee of the Madras Exhibition.

The 15th December is fixed as the latest date for sending things to the Exhibition. Articles admitted after the commencement of the Juries labours, are not permitted to compete for Prizes. But I shall in my letter to the Committee recommend that an exception as to date should be made with respect to articles sent from Europe; especially as you have so liberally taken upon yourselves, all that relates to the development of this material, and I am sure the Committee would wish to allow you the advantage of the latest practicable date to enable you to carry out your intentions, and I will therefore suggest, that the 10th day of January or two days after the expected arrival of the Europe Mail, be fixed as the latest date at which articles from Europe can be admitted to compete for Prizes. I will forward you a copy of the reply of the Committee —together with copy of the Rules—and such other information as the Secretary may think would be acceptable to you.

Relative to the price of the quantity ordered, and the price at which it can be procured in the different States; I can at present give you no information. There is now no price upon it—as it is a weed growing in every neglected spot of waste ground—and the future price will depend much upon the result of the experiments now about to be made upon it. I have only paid a trifle for the collection of the amount I send you, and the daily hire of a woman to mix up, and spin it. It is a plant which, if your experiments upon it prove favorable, can be cultivated to any extent. It grows, as I mention, upon all waste lands, which would be a very great benefit in itself, if required to be planted out, and it is yet difficult to say how far by proper culture in good land, its staple could be improved both as to its length and strength.

I have only been able to spin it for any available use in equal proportions with country cotton, as per sample No. 1, and together with silk cotton and country cotton, as in sample No. 3. Equal parts of silk cotton, and country cotton, form a useful thread, as seen in sample No. 2. I believe that were the Mudar cotton, or the silk cotton, mixed with a long staple cotton such as the American "Uplands," or the "Sea Island" cotton, a less quantity would be sufficient, and it would spin into a finer thread. Should you be able to mix it with silk as you mention, it will be a very great advantage. I have not succeeded in doing so with the native bow, using the raw and floss silk I was able to procure. I believe it would mix well with lambs wool, and I should think with Marino wool.

You will perceive that in these samples I furnish you with silk cotton spun with equal parts of common cotton. Silk cotton has never yet been spun in this country. I believe in this respect that the sample here sent is original; the impression being that silk cotton could not be spun into a thread. You will perceive that by themselves both silk cotton, and the Mudar cotton, are only just capable of being spun; yet the two spun together in equal parts form a thread which though still too weak for any useful purpose, is yet stronger than either separate—and a combination of equal parts of common or country cotton to the two combined, forms a useful thread—as shewn in sample No. 3.

If this should lead to your being able to render silk cotton available for weaving purposes, it will be a great step in advance.

All these threads I find too weak for the warp; but they do for the weft. It is true the Looms in the weaving Establishment attached to the Jail at this Station, are not intended for a delicate thread; but are used for the manufacture of Table cloths, Napkins, Towels, and Trowser cloths. It is probable that were it spun with a due admixture of "Sea Island" cotton into a fine thread, and submitted to a Silk or Hosiery Loom, the result would be more satisfactory.

The filaments from the stem of the "Nelumbium Speciosum"—seem to me capable of being converted into some delicate texture. The filaments, I regret, have not been wound, in the manner they should be. This would be better attended to upon another occasion. It is a water plant, not cultivated; but grows abundantly on the opposite or Malabar Coast, where during the rainy season, it attains a much larger size, and would yield a greater abundance of filaments. By cultivation it could be improved in size, and become common to all tanks.

I remain, dear Sirs,

Yours faithfully,

J. RATTON,

*Zillah Surgeon, Chingleput.*

---

*List of Samples sent per Overland Mail—Steamer "Nubia," in one square box—addressed to Messrs. Thresher & Glenny, 152 Strand, London.*

13 lbs. of Mudar Cotton clean from the Pod.

No. 1—3 oz. Thread, equal parts of Mudar cotton, and country cotton—made up from the cotton sample also marked No. 1.

No. 2—2 oz. Thread equal parts silk cotton, and country cotton—made up from the cotton sample also marked No. 2.

No. 3—Thread—1 part Mudar cotton.
1 part silk cotton.
2 parts country cotton—made up also from the sample cotton marked No. 3.

A Bird's Eye Table Napkin with 3 samples of narrow wefts of the above thread, marked Nos. 1, 2 and 3, wove upon a warp of country cotton.

*Five samples of the following mixed Cottons.*

MUDAR COTTON AFTER BEING BOWED.

No. 1—Mudar cotton, and country cotton, equal parts.

No. 2—Silk cotton and country cotton—equal parts.

No. 3—Mudar cotton 1 part—silk cotton 1 part, country cotton 2 parts.

*Sample of Silk Cotton.*

SAMPLE OF THE COUNTRY COTTON USED IN THESE EXPERIMENTS.

Threads of Mudar Cotton alone—and Silk Cotton alone and in other proportions—all of no strength.

2 Silk Cotton Pods.

*"Calatropis Gigantea"—Mudar—or Yercum.*

The fibres obtained from the inner bark.

*"Nelumbium Speciosum" the Sacred Tawmery Plant.*

The long fine filaments contained within the cells of the stem—and drawn out.
Sample of thread spun from the above filament.

True Copy.

CHINGLEPUT,
*13th August*, 1856.

J. RATTON,
*Zillah Surgeon.*

---

*List of accompanying Samples.*

MUDAR COTTON FROM THE POD.

No. 1. Mudar cotton, and country equal parts.
Thread from the same.

No. 2. Silk cotton, and country cotton equal parts.
Thread from the same.

No. 3. Mudar cotton and silk cotton, each 1 part, country cotton 2 parts.
Thread from the same.

Seven Table Napkins, Damask, and Bird's Eye patterns—showing wefts—of the above thread—marked with the corresponding numbers.

Four samples of Mudar, and silk cotton, variously mixed—including the above sample of the Mudar itself.

Thread Mudar cotton and silk cotton equal parts, No. 4.

Samples by weight, from a single pod of the Mudar, silk, and country cottons.

A silk cotton pod.

Samples of filaments from the stem of the "Nelumbium Speciosum"—or the Sacred Tawmery Plant.

J. RATTON,
*Zillah Surgeon.*

*List of Samples forwarded to Mr. Smyth of Dublin—and Mr. Appleyard of Balbriggan, per Overland Mail—Steamer "Nubia."*

2 lbs. of Mudar Cotton clean from the pod.
A mixture of Mudar, Silk, and country Cotton.
Mudar Cotton and country Cotton in equal parts—and a reel of thread.
Silk Cotton and country Cotton equal parts, 2 reels of thread.
3 other samples of mixed proportions of Mudar and country Cotton and Silk Cotton.
Silk Cotton pods—and a sample of the filaments of the "Nelumbium Speciosum."

---

*Extract from a Letter from Dublin.*

"It was the opinion the Cotton could be spun. It was much admired in Balbriggan. The Cotton usually employed comes from America cost 3*d.* per lb., they also use some superior Cotton from the West Indies, cost 2*d.* per lb. but that your specimen is more beautiful. I was at Appleyard's in Sackville, St. Le took some to send to his spinner. I was also at Smyth's Abbey, St. Le admired it much—he said the quantity was too small to put into a machine, he would want ½ oz. to try it; but he thought it could be spun—he sent some to Belfast to his spinner. Mr. Appleyard's opinion is it could be spun, and made into hose; but that less than one oz. to try it, would be of no use."

True Copy.

J. RATTON,
*Zillah Surgeon.*

# COCHIN.

## Local Committee, Exhibitors.

### FIBRES.

6864 Karinchala Fibre.
6865 Vellachala do.
6866 Venthake do.
6867 Villpoona do.
6868 Kanakaida do.
6869 Anahpanna do.
6870 Mookynee do.
6871 Pandekavalum do.
6872 Vellakavalum do.
6873 Eddumpery do.
6874 Chagunagul do.
6875 Velladumboo do.
6876 Adumboo do.
6877 Kavalanar do.
6878 Takoonar or Teak.
6879 Arayanee do.
6880 Mullaoorgum do.
6881 Nadoonar do.
6882 Vakoopolah do.
6883 Washoonar.
6884 Arumpooly.
6885 Ayanee.
6886 Do. 11 lbs.
6887 Do. 6 lbs.

### BIRDS.

6888 Stuffed Birds of different kinds.

### ANIMALS.

6889 Stuffed Animals.
6890 Do. do.

### GUMS.

6891 Planjee Pusha.
6892 Karimarathom do.
6893 Venga do.
6894 Muttee paul.
6895 Pynee Pusha
6896 Velloovum do.
6897 Chorakutty do.
6898 Paullee do.
6899 Do. do.
6900 Ponga do.
6901 Pauchonthee

## Captain H. Drury, Exhibitor.

### OILS.

6902 Koringota Oil.

## Local Committee, Exhibitors.

### SKINS.

6903 Cheeta Skins Rs. 8.
6904 Do. do. Rs. 4.
6905 Do. do. Rs. 4.
6906 Do. do. Rs. 4.

### EMBROIDERY.

6907 Coloured silk caps on cloth.
6907½ Do. do. do.
6908 Do. Gold white Satin.
6909 Do. Silver Satin.
6910 Doil round.
6911 Do. oblong.

### WOODS.

6912 Kolamawa.
6913 Kavalom.
6914 Poola.
6915 Nedoonar.
6916 Ennakally.
6917 Ellamungum.
6918 Mootenvaga.
6919 Palagapyanny.
6920 Chera.
6921 Veetee.
6922 Maneemarathoo.
6923 Ellenhy.
6924 Oonga.
6925 Nalee.
6926 Pathere.
6927 Poteny.
6928 Pallah.
6929 Odoo.
6930 Veemboo.
6931 Avala.
6932 Kanelpala.
6933 Attookayee.
6934 Kanaknitha.
6935 Vellakael.

6936 Chempelavoo.
6937 Thakoo or Teak.
6938 Attookanhee.
6939 Karinthagara.
6940 Karakeeree.
6941 Neermarathoo.
6942 Ponge.
6943 Choganagul.
6944 Chempelavoo.
6945 Payun.
6946 Chinthoorum.
6947 Coomiehoo.

6948 Chorakatee.
6949 Compala patheree.
6950 Vellatemboo.
6951 Kullala.
6952 Vempala.
6953 Kañagum.
6954 Koorivee.
6955 Thayvara.
6956 Kadaplava.
6957 Cooncevaga.
6957½ Mullavorgum.

# COCHIN.

## STATEMENT AFFORDING THE INFORMATION REQUESTED IN THE PAMPHLET ENTITLED "HINTS ON THE COLLECTING OF WOODS" AND HAVING REFERENCE TO THE SPECIMENS OF WOODS FORWARDED TO THE MADRAS EXHIBITION OF 1857.

| | Names of Trees. | Where grown. | The distance from the Sea. | Whether Water Carriage is available. | Nature of the sub soil | The average height and the thickness of the mature Tree. | | The average length and thickness of the Logs. | | Character of the Trees whether straight or crooked. | Time required for Seasoning. | The Amount of Seasoned Timber generally procurable. | Whether the Trees are increasing or decreasing | The age at which the Tree reaches Maturity. | The objects for which the Wood is adapted. |
|---|---|---|---|---|---|---|---|---|---|---|---|---|---|---|---|
| | | | | | | Height. | Thickness. | Length. | Thickness. | | | | | | |
| | | | | | | Koles. | Borrels. | Koles. | Borrels. | | | | | | |
| 1 | Thakoo | On the Coolasherry, Palapilly, Parawattany, Marchaad, Chittoor, Pothoondy and Nellampathy Hills. | From 50 to 100 Miles. | Yes. | Generally speaking a rich black mould. | 45 | 50 | 30 | 46 | Most of them Straight. | Logs within one year and Taldoms or Planks within six months. | Procurable in large quantities. | Increasing by self sown seedling. | 50 | For Ship building, House building and Furniture. |
| 2 | Veetee | | | | | 40 | 45 | 20 | 41 | | | | | | For Tables, Chairs, Cots, Boxes, &c. |
| 3 | Poteny | | | | | 28 | 12 | 18 | 10 | | | | | 45 | Fit for no substantial work. |
| 4 | Mootenvaga | | | | | 25 | 15 | 17 | 12 | | | | | 20 | For Door Shutters, &c. |
| 5 | Kavalorn | | | | | 25 | 16 | 15 | 13 | | | | | 15 | Fit for no substantial use. |
| 6 | Ucemboo | | | | | 45 | 50 | 30 | 46 | | | | | 30 | Receives paint or varnish easily. |
| 7 | Pala | | | | | 40 | 40 | 30 | 36 | | | | | 50 | Fit for no substantial use. |
| 8 | Ellenhy | | | | | 25 | 15 | 15 | 12 | | | | | 50 | For House building. |
| 9 | Nedoonar | | | | | 45 | 20 | 30 | 16 | | | | | 30 | For temporary sheds and other such like purposes. |
| 10 | Poola | | | | | 60 | 30 | | | | | | | 30 | For Boats. |
| 11 | Odoo | | | | | 26 | 20 | 50 | 26 | | | | | 30 | For House building. |
| 12 | Maneemarathoo | | | | | 30 | 15 | 16 | 16 | | | | | 30 | For do. do. |
| 13 | Patheeri | | | | | 35 | 35 | 20 | 12 | | | | | 40 | Fit for no substantial work. |
| 14 | Nalee | | | | | 17 | 10 | 20 | 26 | | | | | 40 | Used as Planks on which to raise the Stone walls of Wells and Tanks, as they are preserved by water and are known to have remained under water uninjured for a Century and upwards. This Wood is also used for Laths and other purposes. |
| | | | | | | | | 12 | 8 | | | | | | |
| 15 | Chera | | | | | 30 | 25 | | | | | | | | Fit for no substantial work. |
| 16 | Oonga | | | | | 25 | 12 | 20 | 21 | | | | | 50 | Do. do. do. |
| 17 | Ennakeerali | | | | | 14 | 12 | 15 | 10 | | | | | 20 | For wheels of Bandies. |
| 18 | Ellamungum | | | | | 15 | 10 | 10 | 8 | | | | | 30 | The bark is more useful than the wood. |
| 19 | Galagapayance | | | | | 25 | 15 | 12 | 8 | | | | | 30 | Fit for no substantial work. |
| 20 | Polamawa | | | | | 40 | 50 | 15 | 12 | | | | | 25 | For Boats. |
| 21 | Vellakael | | | | | 45 | 30 | 25 | 46 | | | | | 50 | For Casks. |
| 22 | Mullaoorgum | | | | | 40 | 20 | 30 | 26 | | | | | 40 | For House building. |
| 23 | Avala | | | | | 35 | 30 | 30 | 16 | | | | | 40 | For Laths. |
| 24 | Attoo Kayee | | | | | 25 | 12 | 20 | 26 | | | | | 30 | Fit for no substantial work. |
| 25 | Cata Pillava | | | | | 16 | 15 | 15 | 10 | | | | | 30 | Do. do. do. |
| 26 | Choracattee | | | | | 12 | 10 | 10 | 12 | | | | | 30 | For House building. |
| 27 | Payana | | | | | 50 | 50 | 6 | 8 | | | | | 20 | For Boats. |
| 28 | Ahtoo Banhi | | | | | 20 | 10 | 40 | 46 | | | | | 50 | For House building. |
| 29 | Phonga | | | | | 45 | 50 | 12 | 8 | | | | | 30 | For House building and other works. |
| 30 | Coomishoo | | | | | 20 | 10 | 30 | 46 | | | | | 50 | For Troughs, Spouts and such like things. |
| 31 | Cahda Keeri | | | | | 15 | 10 | 12 | 10 | | | | | 25 | For Posts for scaffoldings. |
| 32 | Chinthoorom | | | | | 14 | 10 | 10 | 8 | | | | | 20 | Fit for no substantial work. |
| 33 | Kana Kaida | | | | | 30 | 20 | 8 | 8 | | | | | 15 | Used by the Natives for Cradles, Railings and other work. |
| | | | | | | | | 20 | 16 | | | | | 30 | |
| 34 | Chempelavoo | | | | | 26 | 50 | | | | | | | | For wooden Houses, Cots, Boxes, &c. |
| 35 | Cooni Vaga | | | | | 25 | 14 | 18 | 46 | | | | | 50 | For Planks, &c. |
| 36 | Neermarathoo | | | | | 22 | 15 | 15 | 12 | | | | | 30 | For House building and other works |
| 37 | Carinthagara | | | | | 35 | 40 | 12 | 12 | | | | | 20 | For do. do. do. |
| 38 | Choganagul | | | | | 28 | 30 | 20 | 36 | | | | | 50 | For Almirahs, Palanquins, &c. |
| 39 | Canelpala | | | | | 25 | 25 | 18 | 26 | | | | | 30 | Fit for no substantial work. |
| 40 | Vellatemboo | | | | | 15 | 12 | 20 | 21 | | | | | 50 | Do. do. do. |
| 41 | Kullala | | | | | 16 | 25 | 10 | 9 | | | | | 10 | Do. do. do. |
| 42 | Coompalla Patheri | | | | | 16 | 15 | 10 | 21 | | | | | 50 | For common purposes. |
| 43 | Cocroovi | | | | | 15 | 10 | 10 | 12 | | | | | 15 | For Flambeaus. |
| 44 | Vembala | | | | | 40 | 40 | 10 | 8 | | | | | 16 | Fit for no substantial work. |
| 45 | Kanagum | | | | | 12 | 10 | 30 | 36 | | | | | 40 | For House building. |
| 46 | Thayvara | | | | | 15 | 10 | 8 | 8 | | | | | 20 | For House building and other works. |
| | | | | | | | | 10 | 8 | | | | | 20 | |

# COIMBATORE.

E. B. Thomas, Esq., Collector of Coimbatore, Exhibitor.

2929 Country Musket, Rs. 8.
2930 Pike or Weft, Rs. 2.
2931 Axe, Wrought, As. 8.
2932 Two Bill Hooks, As. 14.
2933 Sickle, As. 2.
2934 Cothoo or small Hoe, As. 1.
2935 Hook Knife with Chain, As. 1.
2936 Nippers, pair, As. 1.
2937 Small Hoe or Cottoo, As. 1.
2938 Knife, As. 4.
2939 Crow Bar, Rs. 1.
2940 Cottoo, resembling Hoe, As. 4.
2941 Five Black Sand Pipes.
2942 Five do. Papers.
2943 Four Papers containing different kinds of Stones.
2944 Sand of the above kind in two Papers.
2945 Four Load Stones, Rs. 1.
2946 White Stones.
2947 Pair of Bellows, Rs. 2-8.
2948 Salt Petre.
2949 Wax, Rs. 1.
2950 Black Dammer, As. 6.
2951 Poonoogoo Seed, As. 4.
2952 Dammer, Raw, As. 4.
2953 Gum, variety, white, As. 2.
2954 Poolimungy Hibbiscus Cannabinus, As. 1.
2955 Cathambay or Panie Nar or Palmaira Fibre, As. 1.
2956 Cuttalay Mungy, As. 1.
2957 Marool Mungy, As. 1.
2958 Samappoo Nar, As. 1.
2959 Thalai Nar.
2960 Attee Nar.
2961 Caroovala Nar.
2962 Brick.
2963 Yercum Fibre.
2964 Senna Leaves.
2965 Calamus.
2966 Cauttoo Cottay.
2967 Wild Mustard.
2968 Four seasoned Leather.
2969 Cocoa Hemp.
2970 Two Red Cloths.
2971 One Black do.
2972 Cotton.

J. B. Roupell, Esq., Civil and Session Judge of Coimbatore, Exhibitor.

2973 Dyed Aloe Fibre Rug, Rs. 2-10.
2974 Do. do. Rs. 2-10.
2975 Four do. Rs. 10-8.
2976 One Small do. Rs. 1-8.
2977 Aloe Fibre.
2978 Black Dyed do.
2979 Red do.
2980 Yellow Dyed Fibre Rug.
2981 Box containing Glass.

Overseer, Mr. Reid, Exhibitor.

2982 Wild Raw Pepper.
2983 Roller of small Canes.
2984 Two Hollow Bamboo.
2985 One do.

S. B. Kanagaroyen, Native Surgeon, Exhibitor.

2986 Substitute for Indian Rubber.
2987 Four Fibres, different Colours.
2988 Substitute for Gutta Purcha.

Government Property, Local Committee of Coimbatore, Exhibitors.

2989 Club for killing Buffaloes, Rs. 1.
2990 Two Axes, Rs. 3.
2991 One Adze, Rs. 3.
2992 Knife, Rs. 1-8.
2993 Bill Hook, Rs. 1.
2994 Cotoo or small Hoe, As. 4.
2995 One do. smaller, As. 1.
2996 Slick with pointed Iron, As. 4.
2997 Burgers Cloth, Rs. 3.
2998 Peas Pulse, As. 4.
2999 Flour of Green Shrub, P. 6.
3000 Fried Rice of do. P. 6.
3001 Ganjy Grain, As. 2.
3002 Fibres of Hill, Rs. 1.
3003 Grain Gatherer.

Kistniah, Native Maramut Superintendent, Exhibitor.

**WOODS.**

3004 Teclona Grandis, As. 2.
3005 Dalbergia Latifolia, As. 2.
3006 Pterocarpus Marsupium, As. 2.
3007 Terminalia Glabra, As. 2.
3008 Acacea Odaratissima, As. 2.
3009 Odina Woodiar, As. 2.
3010 Briedelia Spinosa, As. 2.
3011 Soymida Febrifuga, As. 2.
3012 Eroolamarom, As. 2.
3013 Nauclea Cardifolia, As. 2.
3014 Nauclea Parviflora, As. 2.
3015 Terminalia Chebula, As. 2.
3016 Melia Azadirachta, As. 2.
3017 Acacia Arabia, As. 2.
3018 Ficus Foe Indica, As. 2.
3019 Butea Frondosa, As. 2.
3020 Eugenia Fambolana, As. 2.
3021 Strychnos Potatorum, As. 2.
3022 Terminalia Belerica, As. 2.
3023 Thunkamarom, As. 2.
3024 Wrightia Tinctoria, As. 2.

MADRAS, C. E. S. PRESS—D. P. L. C. CONNOR, PRINTER.

3025 Cocas Mucifera, As. 2.
3026 Ficus Glomerata, As. 2.
3027 Terminalia Chebula, As. 2.
3028 Azadirachta Indica, As. 2.
3029 Conocarpus Latifolia, As. 2.
3030 Carconthoovaray Marom, As. 2.
3031 Acacia Sundra, As. 2.
3032 Vello Onja Marom, As. 2.
3033 Colarati Marom, As. 2.
3034 Jujubus Ziziphus Jujubu, As. 2.
3035 Poolie Marom, As. 2.
3036 Nerium Antidysenterieunes, As. 2.
3037 Canoopalie Maram, As. 2.

## OILS.

3038 Sesamum Orientali, As. 4.
3039 Cocue Mucifera, As. 4.
3040 Bassia Longifolia, As. 2.
3041 Melia Azadirachta, As. 6.
3042 Tapiridus Emarginotus, As. 2.
3043 Recinus Communis, As. 3.
3044 Sinapis Nigra, As. 2.
3045 Varicoommattikoy Oil, As. 8.
3046 Ricinus Communis, variety, As. 2.
3047 Honey, As. 8.
3048 Melia Azadirachta, As. 1.
3049 Arabic, do. As. 1.
3050 Acacia Odaratissima, As. 1.
3051 Vateria Tumbluggla, As. 2.
3052 Hibiscus Connabinus.
3053 Agave Americanus.
3054 Sanseviera Zeylanica.
3055 Cocus Nucifera.
3056 Calotropis Gigantea.
3057 Barasus Flabellifarmis.
3058 Crotalaria Juncea.
3059 Agave Americavos.
3060 Helecteres Isora.
3061 Variety of the Babool Thorn Lencoph Loca.
3062 do. do.
3063 Bahinia.
3064 Thadasi do.
3065 Cull Iché do.
3066 White Silk Thread,
3067 Red do.
3068 Yellow do. } Annas 11-8.
3069 Pink do.
3070 Green do.
3071 Paddy.
3072 Cholum.
3073 Raggy.
3074 Cumboo.
3075 Tenci.
3076 White Sawmay.
3077 Red do.
3078 Black do.
3079 Varagoo.
3080 Pany Varagoo.
3081 Rice.
3082 Doll.
3083 Wheat.
3084 Ooloondoo.
3085 Puahapire.
3086 Thattapire.
3087 Mocha.
3088 Bengal Gram.
3089 Horse Gram.
3090 Castor Oil Seed.
3091 Tarmarind.
3092 Chilly.
3093 Saltpetre, As. 6.
3094 Three Pieces Indigo, As. 4.
3095 Three Kinds Cotton.
3096 Wool.
3097 Tin Box containing 5 Idols, Rs. 3-8.
3098 Tobacco, As. 8.
3099 Muddippol or Gum Resin, As. 2.
3100 Cummin Seed.
3101 Fenugreek.
3102 Mustard.
3103 Coriander Seed.
3104 Poppy Seed.
3105 Cardamum.
3106 Aritharam.
3107 Yellow Colour.
3108 Vermillion.
3109 Saran Cottay.
3110 Strichnos Potatorum.
3111 Cadookoy.
3112 Thanikay.
3113 Siroovare.
3114 Tinsel.
3115 Saffron.
3116 Iron Ore Sand.
3117 Do. do.
3118 Refuse of Iron.
3119 Iron Ploughshare,
3120 Load Stone, As. 8.
3121 White Stones, As. 8.
3122 Red do.
3123 Chunam do. 3 kinds.
3124 Stone for mixing colours, As. 8.
3125 Two Stone Pots, As. 4.
3126 Bangles 2 kinds.
3127 Smelling Root.
3128 Akass Garoodon Root.
3129 Bhoochukra Root.
3130 Malathangy.
3131 River Stones.
3132 Vuttungiputtay.
3133 Nonapputtay.
3134 Canes 6 in No. As. 12.
3135 Do. Roller As. 4.
3136 Brown Sugar.
3137 Castor Oil Seed, small.

# CUDDAPAH.

## M. Murray, Esq., Exhibitor.

### Iron Stone.

2529 Iron stone from Chintalacheroovoo and Banchapully in Doovoor Talook.
2530 Ditto from Rooddraverum and Streerungapoorum in Koilcoonttah Talook.
2531 Ditto Chennoor.
2532 Ditto Chitwail.
2533 Ditto Camalapoor.
2534 Ditto Poolmendalah.
2535 Ditto Goorrumcondah.
2536 Occide of Iron from Muddenpully from which Iron is melted.

### Iron Sand.

2537 Iron sand from Chinnamundiem and Paramatacondah Rayachoty Talook.
2538 Ditto Goorrumcondah.
2539 Ditto Poolmendalah.
2540 Ditto Comarole and Yendapully in Doopand Talook.

### Minerals and Stones.

2541 Mineral from the Mullamalah hills.
2542 Metal ore ditto species unknown.
2543 Pyrites ditto
2544 do in metix.
2545 Red ochre from ditto.
2546 Soft ditto ditto species unknown.
2547 Jasper ditto ditto.
2548 ditto species unknown.
2549 Crystal from Poolmendalah.
2550 Small crystals from Muldenpully.
2551 Large crystal, one black stone, one mineral, one small red stone from Poolmendalah.
2552 A bag of agates from Yerrabulla Poolmendalah Talook.
2553 In the same bag from ditto of different colours species unknown.
2554 Green quartz from do 3 miles from Poolmendalah.
2555 These are taken from the living rock about two miles southwest of Poolmendalah, they are in ridges from 18 Inches to 2 feet and ran for about 30 or 40 yards, between each ridge there is an open space 18 Inches to 2 feet; there is another range of stones all quite regular as if it is the work of art; it is requested that the nature of the formation may be explained.
2556 Different specimens of formations from Mullapa canama 3 or 4 miles south of Poolmendalah.
2557 Of unknown species found near the same place as above.
2558 Species of talc found at 14 miles from Poolmendalah.
2559 Specimens of stone found in the bed of Yerrabulla Vunka, of various colours viz. white, red, green and purple, this is found in large masses embedded in line.
2560 Formations of different coloured clay found 3 miles south of Poolmendalah.
2561 Green granite with quartz do do
2562 Formation of red clay intermixed with green quartz do do.
2563 Apparently flint from do do.
2564 Another specimen of coloured mud from do.
2565 Plum pudding stone with jasper on it from do.
2566 Another species surrounded with yellow border from do.
2567 Very black stone like jet do.
2568 Formation of quartz and granite, the colurs being mixed with red and green do do.
2569 Another specimen of flint from do do
2570 Do do do mixed with mud from do do.
2571 Another specimen of peculiar formation of 3 different kinds of stone from Poolmendalah.
2572 Do do of flint from do do.
2573 Specimens of jasper from do do.
2574 An agate in the formation of the petrified branch of a tree do do.
2575 A formation of white and green coloured stone from Poolmendalah
2576 A specimen of apparently close grain granite, coloured red, and very heavy from do.
2577 Another species of Plum pudding stone from do.
2578 Formation of flint, from do.
2579 Specimen of granite with colours green, purple and white from do.
2580 Formation of earth stone coloured with yellow and red from do.
2581 Granite with the red and other coloured quartz from do.
2582 Whitestone species unknown from do
2583 Jasper quartz &c. from do.

2584 Flint of 3 colours light grey, yellow and dark grey from do.
2585 Specimen of white stone found in abundance in hills from do
2586 Apparently a species of quartz from do.
2587 Do. a blue agate found to the south of ditto.
2588 Another species of flint yellow &c. from do.
2589 Formation of red and green earth, hard and heavy from do.
2590 Do of small size of the above kind from do.
2591 Specimen of stone very hard like flint with the yellow arch on one side of it from do.
2592 Quartz from do.
2593 Species of agate or jasper from do
2594 Formation of stone coloured clay from do.
2595 Do do do.
2596 Formation of clay with stone black like jet attached to it at the top, from do.
2597 Green stone from Malagoontapully in Rayachoty Talook.
2598 Do do like marble from do do
2599 Specimens of granite from the hills in Royachoty, Gorruncondah and Middenpully Talooks.
2600 Flint from Chitwall.
2601 Stone from Cumbum.
2602 Jasper in the matrix from Poolumadalah.
2603 Strange formation, species unknown requested to be informed from do
2604 Pale ochre from do.
2605 Quartz from Chitwall.
2606 Flag from Penna river.
2607 Yellowish green stone.
2608 Black mud used for adulterating Indigo.
2609 Red ochre.
2610 Chunam from Iummulmudgoo.
2611 Stone from Beeracanama pass in the sidhout Talook.
2612 Two stone boxes from Jummulmudgoo for sale at 12 As. for each.
2613 Red ochre from Royachoty,
2614 Species of marble from do.
2615 Crystals from Mullamala hills in do
2616 Red and coloured ochre from do
2617 Species of stone from Gopaulasawmy condah.
2618 Laterite from Chintalochervoo.
2619 Flint from ditto,
2620 Stones from Mooddooreddy, pully

GUNS AND GRASS.

2621 Mango tree.
2622 Horse radish tree.
2623 Yalama ditto (Teloogoo.)
2624 Gum arabic Indica.
2625 Gum arabica.
2626 Chereta from Muddenpully.
2627 Country Sarsaparella.

FIBRES.

2628 Goganar.
2629 Jumpanar.
2630 Alloes.
2631 Two, from the fibre of the yellageesee or flax might be used extensively in the manufacture of paper; at present, it is only used for manure.
2632 Two ropes of the fibre of Yeppee tree, one large one small.
2633 Cotton Mauritius one small bag.
2634 Ditto yellow.
2635 One piece of fine muslin sent by Moottial Paula Cundoo for sale 35 Rupees to be sold.
2636 One piece of silk Handkerchieves, 9 in number of different patterns manufactured in Cuddapah. To be sold for Rs. 20 and paid to Messrs. Binny and Co. for M Murray Esq.
2637 Specimen of silk from Cuddree Talook sold for Rupees 20 or Rs. 5 per viss.
2638 Two black Head cloths with gold edge from Koilcoonttah for sale 10½ Rupees each.
2639 One maund of Indigenous cotton from Wooyalawada Koilcoonttah Talook.

WAX.

2640 Sealing wax.

OF GRAIN.

2641 Paddy called Peshanum.
2642 Ditto Gungasawmy.
2643 Ditto Racalavuddloo.
2644 Ditto Moorarzully.
2645 Ditto Channanee vudloo,
2646 Ditto Yelladapoovudloo.
2647 Ditto. unknown.
2648 Ditto Giradavudloo.
2649 Do. Thellathocala vudloo.
2650 Do. Kristnaneelauloo.
2651 Do. Chentavooppoo vudloo.
2652 Do. Soogathansoovudloo.
2653 Do. Vichum sunna vudloo.
2654 Do. Bungaroothega vudloo.
2655 Do. Gungasawmy vudloo.
2656 Do. Peddtocala vudloo.
2657 Do. Mooradully vudloo.
2658 Paddy called Paumoodoorthy vudloo
2659 Ditto Mooraurezetty vudloo
2660 Horse gram sown in fields
2661 Raghee sown under wells
2662 Baregaloo
2663 Alasunthooloo or Caramondy
2664 Black gram
2665 Lamp oil seeds

2666 Green gram
2667 Horse gram
2668 Wheet
2669 Red grain or cunthooloo
2670 Arecaloo
2671 Buller
2672 Yellagesaloo
2673 White jonnaloo
2674 Raghee sown in fields
2675 Jonnaloo
2676 Raghee sown in garden lands
2677 Red gram or cundooloo sown in the fields
2678 Mucka Jonnah
2679 Sujjaloo
2680 Raghee sown in the wet land
2681 Gingely oil seed
2682 Bengal gram
2683 Wheet sown in fields
2684 Coosoomaloo or oil seeds
2685 Zelacarazooloo or white rice
2686 Ditto Paddy
2687 Paumoodoorty rice
2688 Yerrazeeracarajanaloo rice
2689 Molapoosamy paddy
2690 Moorarali rice
2691 Matapoo rice
2692 Coriander seeds
2693 Mustard
2694 Vilya seeds

FRUITS.

2695 Akhrot fruit of a alenrites triloba
2696 Two composition grind stones for sale, Rupees 8 for both to be remitted to M. Murray Esq.

OIL.

2697 Oil of Akhrot
2698 Ditto of ganda Ferosa this oil is particularily effective in the cure of old ulcers or sores and is strongly recommended to the Medical Board

PAINTED LEATHER PLATE AND DISH MATS.

2699 Plates to be sold at 4 annas each
2700 Dishes Ditto at 8 annas each
2700½ twelve bottles of Honey.

## B. Vengul Reddy, Exhibitor.

GRAINS.

2621 Aunoomooloo
2622 Jonnaloo
2623 Menthooloo
2624 Voolavaloo
2625 Sanagaloo
2626 Gothoomooloo
2627 Menoomooloo
2628 Cumbooloo
2629 Noogooloo
2630 Cuntholoo
2631 Pasaloo

SEEDS.

2632 Woolligudda

FIBRES.

2633 Janapa
2634 Gogoonara
2635 Country Cotton
2636 Ethanara

STONES.

2637 Aracalloo
2638 do White.
2639 do Red
2640 do Black
2641 do Sandal Stone
2642 Jagry Palmaira
2643 do Good
2644 Indigo
2645 Sulpher

# GANJAM.

## Anem Ayennah Weaver, Exhibitor.

GANJAM.

573 Jartar bootah muda puvoula betta bodasoorum chera or woman cloth silk Rs. 38-7-8

579 Muda puvoula nulla bodasoorum chira or woman cloth silk Rs. 27-10-6.

## Asepu Tamiah Exhibitor.

580 Fine bootah muslin cotton Rs. 5-8.

## Tayen Papiah Exhibitor.

581 Plain muslin bootah Rs. 8.

## Gootte Cunniah, Exhibitor.

582 Saloo bootah muslin cotton Rs. 5.

583 Green bootah muslin cotton Rs 5. As. 8.

## Kooseenee Patnaikeedee Carver, Exhibitor.

584 Sandal wood box Rs. 10.

585 Do large card case Rs. 2.

586 Do small do Rs. 1.

587 Do paper knives Rs. 1.

588 One do do Rs. 1.

589 One do do Rs. 1.

Local Committee, Exhibitors.

MINERAL KINGDOM.

2335 Iron 1st sort As. 12-2.
2336 Do 2nd sort As. 9.
2337 Iron Ores.

MINERAL SUBSTANCES PALNAUD AND OTHER MARBLES.

2338 White from Condramootta in Innacondah Talook.
2339 Do from Dyda in Timmercotta do.
2340 Do from Ravoolagudda in Datchapully do.
2341 Do from do. in do.
2342 Do from do. in do.
2343 Do from do. in do.

VEGETABLE KINGDOMS.

GUMS AND RESINS.

2344 Gums of Modooga Butea Frondosa.

OIL SEEDS.

2345 Three Bottles of Linseed Oil As. 6-9.
2346 Do of Cucumber seed Oil As. 6-9.

FIBRES.

2347 Hemp of Nera (Bantinia spicata)
2348 Do of saugo (sause viera zeilaniae)

ANIMAL KINGDOMS.

2349 Do of Modooga (Butea Frondosa)
2350 Horns spotted deer Rs. 2.
2351 Do do As. 10.
2352 Do of Antetope.
2353 Skins of sheep tanned Rs. 1-14.
2354 Do of Goat do As. 10.
2355 Do of spotted deer untanned As. 3.
2356 Do of sheep do As. 2.
2357 Do of Goat do As. 3.
2358 Do of Black Antelope As. 4.
2359 Feather of king Fisher with skins As. 12.
2360 One Piece of Mortar.

---

Vasarowtoo Vencatacroostuoodoo, Punen Chena Ramasawmy, Exhibitors.

2361 One box of sealing wax Rs. 13-8.
2362 One box of sealing wax.

---

Local Committee, Exhibitors.

2363 Lithographic stone from Amaravaty in Guntoor District with specimen of work.

---

Vasarootoo, Jugganaikloo, Exhibitors.

2364 One bag of Cutteemundoo.
2365 One do of Toomma Gum.
2366 One box of 12 Toys.

---

Lingamulloo Paupiah Head Shroff, Exhibitor.

2367 One spotted deer born.
2368 Bees wax.
2369 One Piece of Gogoo Gunny 10 yards.
2370 One Do of Janapa do do.

# HYDERABAD.

## REMARKS OF LOCAL COMMITTEE ON HYDERABAD CONTRIBUTIONS.

It remains now for the Committee to make a few remarks upon the consignment which they have had the honor to transmit to Madras.

As regards the Ores and metals, the General Committee will find specimens of two new Ores, both forwarded to the Resident by Mr. Mulheran of the Trigonometrical Survey. One Ore, already known to the Committee, is from Yatmall on the Southern border of SouthBerar, midway between Karinjah and Paldy. This Ore is very rich and abundant. The other is from Oomrowtee, the great centre of the Cotton producing Country of North Berar. This Ore is also rich and abundant. A third specimen comes from Lohkunda, North Berar, but further enquiries regarding this slag (?) have yet to be made.

The ferruginous laterite of Karosa, is instructive, as a specimen of the rock of that remarkable place. In the side of a mountain of this deposit, are Caves of large size full of soulptures cut out of the rock. The Local Committee are not aware whether these remarkable excavations have been brought to public notice or not.

The Armoor steel—justly celebrated,—and the sword Blades made from it, are objects of interest ; specimens of both have been forwarded.

The Salts from Lunar are superior specimens. The principal facts connected with the curious Geological phenomenon of the Lake, have already been laid before the General Committee.

Articles used in the manufacture of Glass, are from Lunar. The common white quartz and impure Carbonate of Soda were taken from the Bangle Makers' stores. Specimens of Glass, colored with Manganese and Iron, are also submitted.

Though the manufacture of Glass is in a very undeveloped state in the Deccan, yet the Committee will take an interest in the artificial Gems and Spectacle Glasses now submitted for Exhibition. English colored glass is highly prized and very good imitations of Gems are at times made from it by the Glass cutters.

The unfinished Pottery of Raichore, as well as the finished specimens of the same ware deserve attention. The manufacture is far from perfect ; it is still rude and expensive.

The Model of a Brine Well and specimens of the Salts obtained from the Great Brine tract of North Berar, deserve notice. The Wells are Artesian Wells (?), and yield a large quantity of Salt yearly. An early communication on this important subject will probably be made to the General Committee.

Passing to the Vegetable Kingdom the General Committee will find a tolerably complete collection of the Cerealia (Cereols, dry Grains Millets), as they were sent in from the several Talookdars, without selection. The Pulses are also numerous and well represented. The Spices and Condiments are nearly complete. The Starches though not numerous contain a new one from the root of the Bombax heptaphylla, which has been tried and found nutritious. The Plantain powder and the Arrow-root of Hyderabad are also represented. The Sugars are, as a collection, very poor ; this is one of the weak points of the Deccan. The Sugar Candy of the City is however justly approved of.

# HYDERABAD.

Amongst the Spirituous liquors, the Local Committee solicit attention to a new Spirit, obtained from the distillation of Mangoes, and forwarded by Rungasawmy Moodelliar ; with all its merits, the General Committee will perhaps agree with the Committee in thinking, that one Spirit fewer would be a greater boon to humanity than one Spirit more.

The Oils are but feebly represented ; such as they are, the General Committee have them —good and carefully prepared specimens by Mr. Fowler of Bolaurum are also transmitted.

The Ottars are such as are generally prepared for the Hyderabad market. The Gums and Resins are in their usual careless and dirty state. They contain one specimen of Concrete, juice of the Ficus racemosus, and another of the gum of the calatropis gigantea, which may be of use as a substitute for gutta-percha in Telegraphic and Electro casting operations. The dyes and tanning substances are tolerably complete.

A superior set of specimens of the indigenous and imported medicines of Hyderabad, has also been forwarded. These must be carefully returned to Dr. G. Smith.

Amongst the fibres, Flax will attract most attention. Efforts have been made to produce flax and linen in the assigned districts by the Resident, and the first,—and by no means discouraging results—are placed before the General Committee. The other fibres, as usual have been prepared in a slovenly manner.

The specimens of Timbers sent are good, upon the whole. The botanical names of some of them are unknown to the Committee.

Amongst the miscellanea, is the Bojputta, the inner bark of a tree, used to cover Hooka Snakes, and as an Envelope to Hoondies in the wet weather.

The specimens of lac forwarded are very good. Tigers claws which meet with a great demand here, being used as armlets and charms, are also submitted.

The models of Agricultural instruments from South Berar and Raichore have been carefully prepared. Attention is more particularly solicited to the small but complete model of the loom of the Warrungul Carpet Weaver. The original was in daily operation in the Presidency compound, during the period of the late Hyderabad Exhibition.

Sets of Artisan's tools have been submitted for inspection to shew with what rude implements remarkable results are secured. The Native apparatus is primitive but efficient, and when worked by the delicate hand of the Native, results, which even the West with all its Mechanical helps cannot always excel, are secured. These rude implements convey a useful lesson.

The Dials forwarded to your Committee by the Nawab Oomdat ool Moolk Bahadur, Son of the respected Shumsul Oomrah, will doubtless meet with attention, as specimens of neat and elegantly finished workmanship. They shew that the Native workmen is able, with due encouragement and patterns, to make scientific apparatus of a delicate and complex kind.

The Cotton introduced and grown by the Resident, has already been submitted to the Chambers of Commerce of Calcutta, Madras and Bombay, and has received the approbation of eminent Manchester dealers. A small specimen is forwarded. The Committee however trust that the larger specimen previously submitted will find its way into the Exhibition.

The Cotton manufactures speak for themselves ; from the common khadee to the delicate and beautiful Cotton Sarees of Pytun, Nandair and Amerchinta, all are creditably represented.

The beauty of the dyes, as seen in the dyed Muslins and colored Sailahs of Hyderabad, is well illustrated. These dyes are fugitive.

The Deccan is feeble in Woollen Manufactures. The Cumblies and Numdahs are consequently of inferior manufacture.

The manufacture in Tussa Silk of Wurrungul is creditable; the Silk fabrics are thick and even; and the dyes are rich and brilliant. The best specimens come from Pytun, and Aurungabad. The figured Silks too are deserving of notice, and the embroidered Kinkobs are only to be equaled by those of Benares and Guzerat. The mixed fabric called Mushroo, is also fairly represented.

No silk Carpets have been sent from Wurrungul, the Local Committee regarding them as more expensive than useful. The Cotton and Woollen Carpets and Rugs submitted, however, are good specimens of the manufacture. There is much room for improvement in this quarter.

Of the Gold, Silver, embroidered work, and lace, for which Aurungabad has long been celebrated, superior specimens have been sent, illustrating well the innate taste of the Native workmen. The embroidery on Net and Velvet is especially beautiful, and attracted much attention at the Hyderabad Exhibition.

Paper made at Aurungabad and Kaguswarra is forwarded. The Native paper is better suited for Native Ink, which is thick and greasy, than European paper. Under the Superintendence of Captain Hare at Aurungabad, a paper maker at Kaguswarra has exhibited paper made from the Umbarree, Aloe, Baindee and Date. These specimens deserve notice and approbation. Four specimens of binding, shew what the inhabitants of Hyderabad regard, as superior workmanship.

The packet of Fibres from North Berar and from Dr. Riddell will attract attention; the Fabrics prepared by Dr. Riddell, are curious and interesting.

Of silver, gilt, and plated articles, creditable specimens from Aurungabad and Yelgundel are forwarded. Zinc Abkorahs, so much prized in the City, and made at Aurungabad, are also submitted for Exhibition. Superior specimens of Swords made of steel, will also be found in the Catalogue of articles transmitted.

Attention is also solicited by the Local Committee to the steel Carving Knives and Forks, and to the birds scissors, as well as to the scorpion lock, prepared by an ingenious Hyderabad Mechanic. The scorpion is a lock; by gently pulling out the 2d foot of the left side of the animal, the cover of the key hole flies open, and the key being applied and turned reversely, the claws open. The Knives though not well balanced, are well made, and the Ivory handles are neatly stained.

The Model of a Gun and limber made by a Naal Bund at Aurungabad, is the most elegant item of the contribution. A Prize of Rupees 40, has been adjudged to the ingenious and painstaking workman.

The Manufactures in Brass and Alloys are numerous and illustrative.

The well known Biddery ware is also exhibited, though the Local Committee regret that the vases, exhibited at Hyderabad and prepared for Major Davidson, Baroda, could not be forwarded. The applicability of this ware to the imitation of patterns, taken from the Glass Vases of England, France and Bohemia, was well illustrated in these beautiful specimens.

A few examples of the finished Raichore Pottery supplement of the unfinished specimens found in Section 1. Much room still exists for improvement; utility and economy are rather lost sight of, in the effort after display and attractiveness.

The specimens of Agate Trays, &c. are superior. They are much prized in the City, and are supposed to have come from Lahore; no manufacture of this kind being to the Committee's knowledge carried on in Hyderabad or in the Deccan. Do they also come from China?

The leather shields, of Elgundel are good specimens; so is the example of Surat work made at Secunderabad. The lacquered Toys of Neermal deserve notice.

The hilt of a sword belonging to the Right Honorable Lord Harris, exhibits a beautiful specimen of inlaying in Gold; this hilt was executed in Chudderghaut.

# HYDERABAD.

In the decorative department, the Local Committee have much pleasure in referring the General Committee to the six elegant specimens of lattice work in Chunam, forwarded along with the contribution. These specimens attracted much attention here, and are intended for transmission to the London Museum.

The General Committee having met with so much practical sympathy and cooperation from the Dewan of the Hyderabad State, the Local Committee trust that the claims of this Country will not be overlooked, when the practical suggestions of the General Committee regarding the developement of the resources of India, the improvement of its primitive machinery, the extention of its trade, and the direction of its arts, shall have been made public.

## Local Committee, Exhibitors.

6001 One Kadee Rs. 2-2.
6002 One do. Rs. 1-8.
6003 One do. Rs. 1-7.
6004 One do. Rs. 1[illegible]
6005 Two Sailahs 2—4 each Rs. 4-8.
6006 One Sailah Rs. 6-9.
6007 Two Sailahs 4—7 each Rs. 8-14.
6008 Two do. 13—12 each Rs. 27-8.
6009 Three Dotees Rs. 3-1.
6010 One pair Dotees Rs. 5-8.
6011 One do. Rs. 3-7.
6012 One do. Rs. 8-12.
6013 One do. Rs. 7-12.
6014 One do. Rs. 6-2.
6015 One Dooputtah Rs. 1-6.
6016 One do. Rs. 1-6.
6017 One do. Rs. 1-6.
6018 One do. Rs. 1-6.
6019 One do. Rs. 2.
6020 Two do. 3—14 each Rs. 7-12.
6021 One do. Rs. 176-9.
6022 One Sauree Rs. 1-13.
6023 One Cotton Sauree Rs. 34-6.
6024 One Sauree Rs. 35-1.
6025 One do. Rs. 128-6.
6026 One do. Rs. 167.
6027 One Turband Rs. 3-3.
6028 One do. Rs. 6-1.
6029 One do. Rs. 8-2.
6030 Two Turbands 9—2 each Rs. 18-4.
6031 One Mundeel Rs. 25-13.
6032 One do. Rs. 27-4.
6033 One Loongy Rs. 2-8.
6034 One do. Rs. 5-4.
6035 Two Soocees 5—8 each Rs. 11.
6036 Two pair Roomauls Rs. 2-8.
6037 One do. Rs. 3-7.
6038 Two do. 4—13 each 9-10.
6039 One Roomaul Rs. 1.
6040 Two do. 4—4 each Rs. 8-8.
6041 One do. Rs. 6-14.
6042 One do. Rs. 10-5.
6043 One Dundara Rs. 4-1.
6044 One do. Rs. 4-1.
6045 One do. Rs. 4-1.
6046 One do. Rs. 4-1.
6047 One do. Rs. 4-1.
6048 One do. Rs. 4-1.
6049 One do. Rs. 4-1.
6050 One Coloured Muslin Rs. 5-14.
6051 One do. Rs. 5-14.
6052 One do. Rs. 6-2.
6053 One do. Rs. 6-2.
6054 One do. Rs. 6-2.
6055 One do. Rs. 6-2.
6056 One do. Rs. 6-2.
6057 Two do. Rs. 12-4.
6058 One do. Rs. 6-2.
6059 One do. Rs. 6-2.
6060 One do. Rs. 6-2.
6061 One do. Rs. 6-14.
6062 One do. Rs. 7-2.
6063 Eight Chintz Cholees one piece Rs. 1-1
6064 Twenty Specimens of Chintz (packed with Contribution for London.) Rs. 1-14.
6065 Eight Soojnies at 2—14 each Rs. 23.
6066 One do. Rs. 6-5.
6067 One do. Rs. 2-10.
6068 Five Coarse Kanchas 13 As. ea. Rs. 4-1.
6069 Two fine Kanchas 1—2 ea. Rs. 2-4.
6070 Two blue Kanchas Rs. 1-10.
6071 One Doria Jacket Rs. 4.
6072 Two Punchees Rs. 2-2.
6073 One Kummul Rs. 4-8.
6074 Two Choleekuns Rs. 6.
6075 One Turband Rs. 4-2.
6076 One Silk Sauree Rs. 27.
6077 One do. Rs. 30.
6078 One do. Rs. 55.
6079 One do. Rs. 150-2.
6080 One Silk Dotee Rs. 50-13.
6081 One large Silk Dotee Rs. 69-1.
6082 One do. Rs. 70-10.
6083 One do. Rs. 96-14.
6084 One Silk Cholee Rs. 1-6.
6085 One do. Rs. 3.
6086 One do. Rs. 4-13.
6087 One do. Rs. 6.
6088 One do. Rs. 34-10.
6089 One piece Thaftha Rs. 1-12.
6090 One do. Rs. 2-8.
6091 One do. Rs. 3.
6092 One do. Rs. 3.
6093 One Kummerbund Rs. 48-2.
6094 One piece Punchee Rs. 16.
6095 Five Silk Handkchfs. 11 As. ea. Rs. 3-7.
6096 One do. Rs. 6.
6097 One piece silk Himroo Rs. 8.
6098 One do. Mushroo Rs. 9-8.
6099 One do. do. Rs. 16-11.
6100 Two do. do. 17-12 each Rs. 35 8.
6101 One Silk and Cotton Sauree Rs. 8-8.
6102 One do. Rs. 14.
6103 One do. Rs. 16.
6104 One Silk and Cotton Cholee Rs. 3-8.
6105 One do. Rs. 3.
6106 One Kum khab Rs. 23.
6107 One do. Rs. 46.
6108 One Cotton Carpet Rs. 5-8.
6109 One Woollen do. Rs. 5-8.
6110 One do. do. Rs. 32-8.
6111 One Cotton do. Rs. 50-8.
6112 One do do. Rs. 8-4.
6113 Two Woollen Chair Carpets Rs. 2-12 each Rs. 5-8.
6114 One Chair Carpet Rs. 2-1.
6115 One do. Rs. 4-2.
6116 Two Rolls of Silver lace with lac 3-14 each Rs. 7-12.
6117 One embroidered Dooputtah Rs. 24.
6118 Three pieces of gold Tash Rs. 222-12.
6119 Six Embroidered Caps 2 Rs. ea.—Rs. 12.
6120 One Gold Dooputtah Rs. 50.
6121 One Gold Embroidered white Apron Rs. 7-14.
6122 One do. do. black Rs. 7-14.
6123 One White Embroidered purse Rs. 6 9.
6124 Three Pieces Gold Tash Rs. 219-12.
6125 One Gold Carchoby Kummerbund Rs. 25-6.
6126 One Pair Peacock feather Morechuls Rs. 19-8.
6127 One Silver Chumky Rs. 3-11.
6128 One Roll Gold lace Rs. 24-6.
6129 One do. of Silver Gockroo Rs. 4-7.
6130 One do Gold and Silver Fringe Rs. 12-9.
6131 One do Jowdanee Rs. 9-8.

6132 One Roll narrow (to match the above) Rs. 4-2-7.
6133 Silver Lace and Buttons Rs. 7.
6134 One Roll Gold Gockroo Rs. 6-1.
6135 One Embroidered Reed Pen Rs. 1-4.
6136 One Red velvet Saddle cloth in 9 pieces Rs. 71-12.
6137 One set of Horse Reins Rs. 16-6.
6138 Five specimens of Paper.
6139 Three Nos. of 3 Issues of the Hyderabad Medical Journal.
6140 Four Specimens of Book Binding Rs. 13-8.
6141 Specimens of Fibre and Rope
6142 One Silver gilt Vase Rs. 76-15.
6143 One goolab Pash Rs. 12-4.
6144 One Silver ring in 11 pieces Rs. 3.
6145 One Utter Dhan Rs. 50-3.
6146 One Kullum Dhan Rs. 138-11.
6147 One plated hookah bottom Rs. 18-5.
6148 One Copper Chillum Rs. 3.
6149 One Sword Rs. 34-6.
6150 One Straight Sword Rs. 34-6.
6151 One Dagger Rs. 18.
6152 Two Sword Handles Rs. 2—1 each Rs. 4-2.
6153 Three Horses' bits Rs. 3-10.
6154 One Betel Nut Cutter Rs. 1-1.
6155 One Hookah bottom Rs. 12-7.
6156 to 6159 Thirty-one specimens of lacquered ware Rs. 2-4.
6160 Fourteen specimens of glazed ware Rs. 1-8.
6161 Nine specimens of talcd-ware Rs. 4.
6162 to 6164 Three specimens of Manufacture in Agate Rs. 25.
6165 Five Bulphum vessels Rs. 2.
6166 Three pairs of polished horns Rs. 2-8.
6167 One Horn Paper Cutter Rs. 2.
6168 One Work basket Rs. 10.
6169 to 6171 Specimens of lac Ornaments &c. Rs. 8-6.
6172 One Leather shield Rs. 3-10.
6173 One do do Rs. 3-1.
6174 One do do Rs. 2-14.
9175 One Set Samber Reins As. 4.
6176 Four Pieces of Waist Belts Rs. 3-7.
6177 One Pair wooden Clogs Rs. 1-6.
6178 Fifty-two Wooden spoons As. 12.
6179 One Blackwood writing Desk Rs. 11-6
6180 A basket for smoking the hair As. 3.
6181 & 6182 Four Naiches of bead work Rs. 24-8.
6183 One Specimen of Surat work Rs. 55.
6184 One Gent's Card case Rs. 5.
6185 Scented powder Rs. 2-1.
6186 Ugger buddy Rs. 6-14.
6187 Burmakky Rs. 6-14.
6188 One Pair of embroidered slippers Rs. 9.
6189 One set of wooden lacquered Toys Rs 4-4
6190 One Sailah Rs. 1-6.
6191 One do Rs. 5-10.
6192 One do Rs. 7-12.
6193 One do Rs. 10-14.
6194 One do. Rs. 24-12.
6195 A pair of Dotees Rs. 2-5.
6196 One do. Rs. 2-5.
6197 One Doobuttah Rs. 2-9.
6198 One do. Rs. 2-9.
6199 One do. Rs. 64-9.
6200 One Saurce Rs. 4-7.
6201 One do. Rs. 4-7.
6202 One Saurce Rs. 14.
6203 One do. Rs. 28-14.
6204 One do. Rs. 60-8.
6205 One do. Rs. 88-4.
6206 One Turband Rs. 4-12.
6207 One do. Rs. 7-4.
6208 One do. Rs. 11-10.
6209 One do. Rs. 13-10.
6210 One Mundeel Rs. 15-4.
6211 One do. Rs. 17-12.
6212 One do. Rs. 35-5.
6213 Two Pairs of Roomauls Rs. 2.
6214 Two do. Roomauls Rs. 7 1.
6215 One Cholee Rs. 4-10.
6216 One do. Rs. 6.
6217 Two Dorias 6 Rs. each Rs. 12.
6218 One Doria Rs. 10-8.
6219 One Coloured Muslin Rs. 7-10.
6220 One Putka Gold bordered Rs. 71-7.
6221 One Silk Sauree Rs. 27.
6222 One do. Rs. 52-4.
6223 One do. Rs. 52-1.
6224 One do. Rs. 63-10.
6225 One do. Rs. 96-8.
6226 One do. Rs. 96-4.
6227 One do. Rs. 99.
6228 One do. Rs. 148-8.
6229 One Silk Dotee Rs. 26-7.
6230 One do. Cholee Rs. 1-9.
6231 One do. do. Rs. 2-12.
6232 One Piece Soocee Rs. 5-4.
6233 One do. of Thaftha Rs. 6.
6234 One do. Rs. 8-4.
6235 One Piece Silk Himroo Rs. 5-4.
6236 One do. Rs. 7.
6237 One do. Rs. 38.
6238 One do. Rs. 42.
6239 Two Pieces of Silk Mushroo 6-12 each Rs. 13-8.
6240 One Silk Mushroo Rs. 17-1.
6241 One do. Rs. 18-1.
6242 One Silk and Cotton Saurce Rs. 6-3.
6243 One do. Rs. 19-4.
6244 One do. Rs. 28-14.
6245 One Piece Cholee Rs. 7-3.
6246 One Kum khab Rs. 16.
6247 One do. Rs. 28.
6248 One do. Rs. 30.
6249 One do. Rs. 66.
6250 One do. Rs. 187-8.
6251 One Cotton Carpet Rs. 7-2.
6252 One Prayer do. Rs. 8-4.
6253 One Roll Gold Lace Rs. 24-15.
6254 One Gold Carchoby Kinnaree Rs. 15.
6255 One Silver do. Rs. 15.
6256 One Sailah Rs. 4-5.
6257 One Turband Rs. 5.
6258 Two Pairs Roomauls Rs. 2-8.
6259 One Pair do. Rs. 2-9.
6260 One Soojunee or Quilt Rs. 1-14.
6261 One Sunjurkaney Rs. 5.
6262 One Silk Sauree Rs. 58.
6263 One Pair Handkerchieves Rs. 2-8.
6264 Fourteen Specimens of Pottery Rs. 30.
6265 One Doosootee
6266 One Saurce Rs. 8-14.
6267 One Numdah
6268 One Kummul Rs. 4-10.
6269 One Silk Sauree Rs. 18-6.
6270 One do. Rs. 23-3.
6271 One Large Silk Dotee Rs. 10-11.

6272 Oleum Anethi Rs. 2.
6273 „ Anisi As. 12.
6274 „ Juglans Pteroc lbs. 2—Rs. 1-8.
6275 „ Ricini lbs. 1½—As. 12.
6276 „ Sison Ammi lbs. 2—As. 12.
6277 Marant: Aurundinac: lbs. 1½—Rs. 1.
6278 A Bottle of Jesamine Oil Rs. 2-8.
6279 Five pieces Steel Rs. 4—11 each Rs. 23-7.
6280 Bangles of various colors As 15.
6281 do do As. 12.
6282 A Crystal Amethyst Rs. 1.
6283 Seven imitation Glass Gems Rs. 3.
6284 Six do do Rs. 2.
6285 Nine do do Rs. 6.
6286 Three do Cinnamon Stones Rs. 1.
6287 Six Dozens do Stones Rs. 6.
6288 Five Blue Glass Coat Buttons Rs. 1.
6289 Six Hundred Glass Beads Rs. 1.
6290 One Row white do As. 8.
6291 Two pairs Cataract Glasses Rs. 7.
6292 Artificial Pearls and a pair green earings As. 9.
6293 One Granite Mortar and Pestle Rs 2-12.
6294 A Row of white stone Beads As. 4.
6295 Two Specimens of Rock Crystals cut Rs. 2-1.
6296 Two Small Topazes Rs. 3.
6297 A Rock Crystal Stone for Ring Rs. 1-4.
6298 Two Specimens of jet Rs. 1-1.
6299 Twelve Stones of rock Crystals for a Bracelet Rs. 4 2.
6300 A Set of garnet Beads Rs. 6-14.
6301 A Signet Ring of Rock Crystal Rs. 2-12.
6302 A Set of Rock Crystal Beads Rs. 6-14.
6303 Two pairs of Spectacle Glasses Rs. 5-8.
6304 One Rock Crystal Seal Rs. 1.
6305 Two do Cut Rs. 1.
6306 One Stone said to be jasper As. 12.
6307 do imitation sapphire Rs. 1
6308 Four Cornelians Rs. 5.
6309 A String of Garnet Beads Rs. 2.
6310 Four Moonstones Rs. 1.
6311 Two Jet Stones Rs. 1-8.
6312 Eight Moonstones Buttons Rs. 4.
6313 One Cornelian Rs. 3.
6314 Twenty six sorted stones Rs. 9.
6315 A set of Goldsmith's Instruments Rs. 2-9.
6316 do Weaver's do Rs. 1-6.
6317 do Stone Cutter's do Rs. 3-7.
6318 do Carpenter's do Rs. 6-3.
6319 do Coppersmith's do Rs. 3-7.
6320 do Ironsmith's do Rs. 7-1.
6321 Iron for preparing Grinding Stone Rs. 1.
6322 Amber Utter Rs. 8 3.
6323 Sohag do Rs. 7.
6324 Chumballa do Rs. 6 9.
6325 Mootheah do Rs. 6-9.
6326 Rose do Rs. 2-10.
6327 Kavedah do Rs. 2-10.
6328 Munbavun do Rs. 9-13.
6329 Panch do Rs. 7-3.
6330 Babar do Rs. 6-9.
6331 Mootheah do Rs. 1.
6332 Juah do Rs. 1.
6333 Mujmoorah do Rs. 1.
6334 Rahutha Roo do Rs. 1. [Rs. 5-15.
6335 Sealing Wax Sticks of Various Colors
6336 Glass for Making Bangles Rs. 4.
6337 One Paichwan Naicha Rs. 15.

## Nawab Salar Jung Bahadoor and Hyderabad Committee, Exhibitors.

6338 One Red Silk Sauree Rs. 30.
6339 One Piece Mushroo Rs. 19.
6340 One Green and Red Mushroo Rs. 19.
6341 One do do Rs. 18.
6342 One Red Mushroo Rs. 21.
6343 One do do Rs. 18.
6344 One do do Rs. 18.
6345 One do do Rs. 18.
6346 One do do Rs. 22.
6347 One do do Rs. 24.
6348 One do do Rs. 17-12.
6349 One do Rs. 17 12.
6350 One do do Rs. 22-8.
6351 One do do Rs. 17-12.
6352 One Mushroo Rs. 22.
6353 One do Rs. 19-12.
6354 One do Rs. 16-8.
6355 One do Rs. 17.12.
6356 One do Rs. 17-12.
6357 One do Rs. 17-12.
6358 One Piece Kumkhab Rs. 18.
6359 One do do Rs. 40.
6360 One do do Rs. 23.
6361 One do do Rs. 34-8
6362 One do do Rs. 17.
6363 One do do Rs. 26.
6364 One do do Rs. 18.
6365 One do do Rs. 22.
6366 One do do Rs. 25-12.
6367 One do do Rs. 28.
6368 One do do Rs. 31.
6369 One do do Rs. 30.
6370 One Callabathoon Mushroo Rs. 55.
6371 One Piece Embroidered Tash Rs. 16.
6372 One Carchoby Kinnaree Rs. 11.
6373 One do do Rs. 10.
6374 One Silver Kinnaree Rs. 8.
6375 One Gold do Rs. 13.
6376 One Embroidered Persian Pen Rs. 1-8.
6377 One Piece Gold Tash Rs. 23-15.
6378 Two do Silver do Rs. 44-2.
6379 Two do Gold do Rs. 53-2.
6380 One Piece Mushroo Rs. 20.
6381 One do Tash Rs. 23-8.
6382 One Tash Carchoby Turband Rs. 35-1.
9383 One do Tash Rs. 35-1.
6384 One Piece Embroidered Kinnaree Rs. 35 13.
6385 One do do do Rs. 19-15.
6386 One do do do Rs. 62-12.
6387 One do do do Rs. 48-5.
6388 One do do do Rs. 28 7.
6389 One Embroidered Naicha Cloth Rs 18-15.
6390 One Piece Mushroo Rs. 22-5.
6391 One do do Rs. 22-11.
6392 One do do Rs. 19-1.
6393 One do do Rs. 21-11.
6394 One do do Rs. 19 11
6395 One do do Rs. 17-12.
6396 One do do Rs. 16-12.
6397 One do do Rs. 19 5.
6398 One do do Rs. 20-5.
6399 One do do Rs. 20-11.
6400 One do do Rs. 22-5.
6401 One do do Rs. 20-6.
6402 One do do Rs. 18-1.
6403 One do do Rs. 23-10.
6404 One do do Rs. 19-1.

6405 One Piece Himroo Rs. 38-1.
6406 One do do Rs. 40-11.
6407 One Beetle-nut bag Rs. 27.
6408 One Red Cotton Dooputtah Rs. 64-9.
6409 One do do Rs. 30-8.
6410 One do do Rs. 32-13.
6411 One Sauree Rs. 64-4.
6412 One Dooputtah Rs. 20-13.
6413 One Sauree Rs. 64-5.
6414 One do Rs. 32-5.
6415 One Dooputtah Rs. 20-13.
6416 One do Rs. 44-13.
6417 One Sauree Rs. 49-14.
6418 One do Rs. 34-11.
6419 One Dooputtah 64-9.
6420 One Sauree Rs. 64-5.
6421 One Dooputtah Rs. 18-8.
6422 One do Rs. 20-14.
6423 One do Rs. 22-10.
6424 One do Rs. 19-5.
6425 One do Rs. 21.
6426 One do Rs. 48-2.
6427 One do Rs. 51-6.
6428 One do Rs. 44-13.
6429 One do Rs. 51-6.
6430 One do Rs. 51-6.
6431 One do Rs. 20-14.
6432 One do Rs. 16 1.
6433 One Sauree Rs. 96-14.
6434 One Dooputtah Rs. 16-1.
6435 One do Rs. 64-9.
6436 One Sauree Rs. 80-12.
6437 One do Rs. 60-15.
6438 One do Rs. 48-7.
6439 One do Rs. 128-6.
6440 One do Rs. 72-3.
6441 One do Rs. 38-12.
6442 One do Rs. 24-1.
6443 One do Rs. 17-12.
6444 One do Rs. 24-1.
6445 One do Rs. 41.12.
6446 One Dooputtah Rs. 56-8.
6447 One do Rs. 56-8.
6448 One White Roomaul Rs. 51-11.
6449 One do Rs. 62-10.
6450 One do Rs. 51-11.
6451 One Mundeel Rs. 16-1
6452 One do Rs. 18-9.
6453 One do Rs. 17-14.
6454 One do Rs. 18-9.
6455 One do Rs. 18-9.
6456 One do Rs. 19-6.
6457 One do Rs. 17-12.
6458 One Silk Sauree Rs. 24-15.
6459 One do do Rs. 43-6
6460 One do do Rs. 68-5
6461 One do do Rs. 41-6
6462 One do do Rs. 66-14.
6463 One do do Rs. 105-12.
6464 One do do Rs. 74 5.
6465 One do do Rs. 144-5.
6466 One do do Rs. 76-2.
6467 One Silk Dotee Rs. 64-9
6468 One do do Rs. 64-9
6469 One do do Rs. 46-10.
6470 One do do Rs. 26-7.
6471 One do do Rs. 30-8.
6472 One do do Rs. 43-6.
6473 One do do Rs. 71-6.
6474 One Embroidered Umbrella Rs. 158-2.
6475 One do Fan Rs. 68-2.
6476 One Pair Dotees Rs. 20-10.
6477 One Cheera and Putka Embroidered Rs. 22.
6478 One Piece green Tash Rs. 4.
6479 One Plain Gold Tash Rs 7-8.
6480 One Piece Silver Tash Rs. 6.
6481 One do Yellow Tash Rs. 4.
6482 One do Red Tash Rs. 3.
6483 One do Green Tash Rs. 4.
6484 One Bundle of Gold Gotah Rs. 5-7.
6485 One Roll Silver Lace Rs. 4-12.
6486 One do Neem Calabathoon Rs. 21.
6487 One Gold Carchoby Border for Sauree Rs. 16.
6488 One Embroidered Cap Rs. 23.
6489 One Gold Embroidered Naicha Cloth Rs. 18-14.
6490 One Gold Kinnaree Rs. 14.
6491 One Satin Scarf Rs. 91-14.
6492 One Gold Embroidered Saddle Cloth Rs. 99-6.
6493 One Embroidered Hookha Carpet Rs. 38.13.
6494 One do Aftabgeeree (2 pieces) Rs. 110.
6495 Five Rolls of Gold Lace Rs. 49-11.
6496 One Silver Gilt Utter Dan Rs. 66-4.
6497 Silver Head of the Aftabgeeree Rs 69-1
6498 One Silver Box Rs. 80-1.
6499 One Embroidered Whip Rs. 4-6.
6500 Scented Ornaments used by Women Rs. 27-8.
6501 One Mixed fabric Sauree Rs. 22.
6502 One do do Rs. 38-8.
6503 One do do Rs. 38-8.
6504 One do do Rs. 35-12.
6505 One do do Rs. 17-3.
6506 One do do Rs. 28-6.
6507 One do do Rs. 23.
6508 One Pair Dotee Rs. 15-1.
6509 One Peetumber Rs. 31-10.
6510 One Sauree Rs. 28-14.
6511 One do Rs. 30-15.
6512 One Cotton and Silk Sauree Rs. 34-6.
6513 One Sauree Rs. 96-8.
6514 One Silk Jahler or fringe Rs. 18-4.
6515 One Cotton Sauree Rs. 17-14.
6516 One Woollen Carpet Rs. 16-12.
6517 One Sauree Rs. 26-2.
6518 One Sailah Gold Bordered Rs. 37-2.
6519 One do do Rs. 37-2.
6520 One do do Rs. 50-14.
6521 One Sailah Rs. 19-4.
6522 One do. Rs. 18-9.
6523 One Doria Rs. 19-14.
6524 One Dooputtah Gold Bordered Rs. 34-6.
6525 One Silk Sauree Rs. 53-10.
6526 One do do Rs. 58-2.
6527 One Cotton Dotee Rs. 28-6.
6528 One do Sauree Rs. 22.
6529 Twelve do Cholees Rs. 18-9.
6530 Six Silk do Rs. 22-11.
6531 One do Sauree Rs. 106-8.
6532 One Mixed Sauree Rs. 27-8.
6533 One do. do. Rs. 27-8.
6534 One Silk Dotee Rs. 39-14.
6535 One do Sauree Rs. 35.
6536 One do do Rs. 33.
6537 One Piece Cotton Roomaul Rs. 4-2.
6538 One Cotton Sauree Rs. 28-12.

6539 One Set of Embroidered Horse Reins Rs. 27-8.
6540 One Sword belt, Embroidered Rs.13-12
6541 One Brass Mushal handle Rs. 2.
6542 One .do Kullee Hookha Bottom with stand Rs. 3-2.
6543 One do Hookha Bottom with stand Rs. 2-9.
6544 One do Furshee Rs. 1-14.
6545 One do do Rs. 2-1.
6546 One do do Rs. 2-2.
6547 One do do Rs. 1-8.
6548 One do do Rs. 1-9.
6549 One Brass Pan dan Rs. 1-9.
6550 One do Snake's head As. 11.
6551 One do Bucket Rs. 1-1.
6552 One do Meetah or Jug Rs. 1-6.
6553 One do Lotah As. 9.
6554 One do Abkorah Rs. 1.
6555 One do Lotah Rs. 1-13.
6556 Two do Combs As. 4.
6557 One do (flower Vase) 2-2.
6558 One do Bell Rs. 2-13.
6559 One do Abkorah Rs. 1-12.
6560 One do Chungare Rs. 3-5.
6561 One do Fish As. 11.
6562 One do Elephant on Stand Rs. 6.
6563 One do Box Rs. 1-3.
6564 One do Horse As. 13.
6565 One Pair Horse Stirrup Rs. 2-15.
6566 One Ood-dan Rs. 3-9.
6567 One Brass Bull Rs. 6-6.
6568 One do Book Stand Rs. 4-5.
6569 One do Shield Rs. 5.
6570 One do Pair Bells Rs. 13.
6571 One do Pickle pot Rs. 6-14.
6572 One do Abkorah Rs. 1-5.
6573 One do Plate Rs. 4-12.
6574 One do Lotah Rs. 2 6.
6575 Six Pairs Toe Rings As. 14.
6576 One Pair Brass Kulkals Rs. 1.
6577 One do Bederware (Carpet weights) Rs. 12-14.
6578 One do do do Rs. 11-2.
6579 One do do Spice Box Rs. 8-6.
6580 One do Cup and Saucer Rs. 15-8.
6581 One do Hookha Bottom Rs. 12-8.
6582 One Zinc Goglet Rs. 6-4.
6583 One Set of Scented Ornaments for men Rs. 27-8.
6584 One Leather Shield Rs. 3-1.
6585 One do do Rs. 3-1.
6586 One Choorah (large Knife) Rs. 16-8.
6587 One Sword Rs. 34-6.
6588 One do Rs. 34-6.
6589 One Choorah Rs. 34-6.
6590 One Paiskkubbs Rs. 9 10.
6591 One Roll Silver fringe Rs. 13-9.
6592 One Roll Gold Lace 13-6.
6593 Eight Rolls Silver Kinnaree Rs. 29-9.
6594 Eight do do Lace (narrow) Rs. 23-12.
6595 Five do Gold do. Rs. 16-15.
6596 Five do Silver Lace Rs. 9.
6597 One Bundle silver Thread Rs. 7-4.
6598 One do Sulmah Gold Rs. 7-9.
6599 One Silver Sword handle Rs. 66-11.
6600 One do Utter dan Rs. 50-8.
6601 One do Hookha Chain 16-3.
6602 One do do Rs. 27-15.
6603 One do small do Rs. 1-11.
6604 One Necklace Rs. 53-5.
6605 One Necklace Rs. 53-5.
6606 Specimens in Agate Rs. 6.
6607 Shist for Arrows Rs. 2.
6608 One do Rs. 2.
6609 One do Rs. 2.

## Captain Davis, Exhibitor.

6610 A small Collection of fibres &c., from North Berar.

## Nawab Oomdut-ool-Moolk Bahadoor, Exhibitor.

6611 An universal Dial.
6612 A horizontal Dial.

## Dr. Smith, Exhibitor.

6613 Three Copies of the three issues of the Hyderabad Medical Journal.
6614 A carefully selected set of the indigenous and imported Medicines of Hyderabad.

## Captain Palmer, Exhibitor.

6615 A Hookha Bottom of Biddery Ware.

## Resident of Hyderabad, Exhibitor.

6616 Various Specimens in Flax and Cotton Vide Section III.

## Captain Taylor, Deputy Commissioner W. D., Exhibitor.

6617 Piece of Red Twisted Silk.
6618 do Yellow Silk.
6619 do do do
6620 do do do

## Articles purchased by the Resident for the Honorable East India Company's London Museum.

6621 Four Kadees Rs. 1¼ each Rs. 5.
6622 One Jote Rs. 1-4.
6623 One Sailah Rs. 3-4.
6624 One do Rs. 3-4.
6625 One do Rs. 8-9.
6626 One do Rs. 15-13.
6627 One Dootee Rs. 1-2.
6628 One pair Dootees Rs. 40-8.
6629 One Dooputtah Rs. 13 10.
6630 One do Rs. 20-2.
6631 One Saaree Rs. 2-5.
6632 One do Rs. 7-2.
6633 One do Rs. 7-2.
6634 One do Rs. 30-8.

6635 Four Turbands Rs. 2 each Rs. 8.
6636 Two Mundeels Rs. 25 do Rs. 50.
6637 Two Loongees Rs. 4-8 do Rs. 9.
6638 One Pair Roomauls Rs. 8-4.
6639 Two Cholees Rs. 3-7 each Rs. 6-14.
6640 One Roomaul Rs. 16-5.
6641 Two Pieces Thagut work in leaves Rs. 2-4 each Rs. 4-8.
6642 One Silk Sauree Rs. 100-1.
6643 One Piece Mushroo Rs. 19-1.
6644 One Pair Morechuls Rs. 76-12.
6645 One Specimen Beder Ware Rs. 116-14.
6646 One do Rs. 22-14.
6647 One do Rs. 4-11.
6648 Model of a Gun Carriage and Limber made by Bod Raj Rs. 100.
6649 One Sailah Rs. 14-9.
6650 One Sauree Rs. 5-4.
6651 One Doria Muslin Rs 19-4.
6652 One Roomaul Rs. 96-4.
6653 One do Rs. 112-5.
6654 One Colored Muslin Rs. 5-6.
6655 One do Rs. 5-6.
6656 One do Rs. 5-6.
6657 One do Rs. 5-6.
6658 One do Rs. 5-6.
6659 One do Rs. 5-6.
6660 One do Rs. 5.6.
6661 One do Rs. 5-6.
6662 One do Rs. 5-6.
6663 One do Rs. 5-6.
6664 One do Rs. 5-6.
6665 One Sooznee Rs. 4-5.
6666 One do Rs. 4-9.
6667 One do Rs. 2-14.
6668 One do Rs. 4-5.
6669 One do Rs. 4-9.
6670 One do Rs 4-5.
6671 One do Rs. 4-5.
6672 One do Rs. 4-5.
6673 One do Rs. 4-5.
6674 Oue do Rs. 6-5.
6675 One Thagut Roomaul Rs. 9.
6676 Seven Pieces Tassa Silk Rs. 7-15 each Rs. 55-9.
6677 One Silk Sauree Rs. 68-4.
6678 One do Rs. 173-5.
6679 A Bundle of Silk & Cotton Ezar Bunds (5 pieces) Rs. 3-2.
6680 One Piece Silk Himroo Rs. 40-11.
6681 One do Mushroo Rs. 43-5.
6682 One do Kumkhab Rs. 262-8.
6683 One Cotton Carpet Rs. 50-8.
6684 One Woollen Carpet Rs. 32-8.
6685 One Gold embroidered White Gown Rs. 111-9.
6686 One do Black do Rs. 137-13.
6687 One do Musnud with Pillows Rs. 233.
6688 Two Specimens of Paper
6689 One Bundle of Nizam's Shahee Paper, Rs. 2-15.
6690 One Bundle Kaitkee Paper Rs. 3-10.
6691 Pullas Park do Rs. 3-10.
6692 Shayestakhanee do Rs. 11-13.
6693 Bahadurkhanee do Rs. 10-11.
6694 Paper made from Cloth Rs. 4-4.
6695 do Silk Rs. 7-12.
6696 do Kaverah fibres Rs. 3-10.
6697 Glazed Paper Rs. 4-7.
6698 Silver Pan Dan Rs 217-14.
6699 Plated Hookha Bottom Rs. 10.
6700 Five Articles made of Zinc Rs. 6-9.
6701 One do Rs. 6-4.
6702 One Sword Rs. 61-8.
6703 One do Rs. 34-6.
6704 One do Rs. 50.
6705 One Agate Plate Rs. 40.
6706 One Leather Shield Rs. 3-7.
6707 Six Specimens of Chunam lattice work Rs. 205-14.

## Resident of Hyberabad, Exhibitor.

6708 Model of a Native Plough from Raichore
6709 do do South Berar.
6710 do Tippon or Drill Raichore.
6711 do do South Berar.
6712 do Mograh or Drill Plough South Berar.
6713 do Bukker or Clodcrusher do.
6714 do do Raichore.
6715 do do do.
6716 do Dowrah or Weeder South Berar.
6717 do do do
6718 do of Mote. do
6719 do Retcha or Cotton Cleaner do.
6720 do do Raichore.
6721 do Churka South Berar.
6722 do do Raichore.
6723 do Cotton Cleaner South Berar.
6724 do do Raichore.
6725 do Oil Press South Berar.
6726 do Sugar Mill do.
6727 do Carpenter's Adze Raichore.
6728 do Wurungul Carpet Weaver's loom, Chudderghaut.
6729 Two Specimens of Sculpture, South Berar.

## Hyderabad Committee, Exhibitors.

6730 Specimens of Knives, Scissors and Scorpion Lock made by a Workman in Hyderabad.

## Dr. Riddell, Exhibitor.

6731 Seventeen Specimens of fibres and fabrics made of Various Materials.

## Dr. Day, Asst. Surgeon H. C., Exhibitor.

6732 A Case of Indian Birds.

## Captain Meadows Taylor, Deputy Commissioner, Exhibitor.

8321 Jowaree white Pice 3.
8322 Do. kavalee Pice 3.
8323 Do. yellow Pie 1.
8324 Jodo wheat Pice 3.
8325 Bajree Pice 2.
8326 Onion Seed As. 1.
8327 Gajra Seed Pice 6.
8328 Black Paddy Pice 6.

8329 Moongya Pice 4.
8330 Poppy Seed Pice 9.
8331 White Sawa Pice 3.
8332 Buré Soap Pice 6.
8333 Dood Megra Pice 3.
8334 Dark Paddy coarse Pice 5.
8335 White do. do. Pice 4.
8336 Moong Pice 5.
8337 Oodud Pice 6.
8338 Methee (cummin) Pice 3.
8339 Thill, Sesamum Pice 6.
8340 Castor Oil Seed Pice 5.
8341 Wury3 Pice 3.
8342 Ambara Pice 2.
8343 Vurda or Koosur Pice 2.
8344 Linseed (Jaoos) Pice 4.
8345 Satoo, a kind of wheat Pice 3.
8346 Kodroo Pice 2.
8347 Mukka Pie 1.
8348 Mussooree Salee Round Paddy Pice 5.
8349 Rajgeera black Pice 6.
8350 Do. white Pice 6.
8351 Lachna Pice 2.
8352 Karel Pice 4.
8353 Sawa black Pice 3.
8354 Bahadlee Pice 3.
8355 Gram Pice 4.
8356 Junnum Seed Pice 3.
8357 Argudea Jowaree coarse Pie 1.
8358 Jowaree red (Bhendya 2d kind termed Lamde) Pice 2.
8359 Red Paddy Pice 3.
8360 Buttana (Peas) Pice 2.
8361 Lakh Pice 2.
8362 Ralèh white Pice 2.
8363 Sép Seed Pice 5.
8364 Wowa Pice 6.
8365 Mustard Pice 5.
8366 Black Raleh Pie 1.
8367 Cucumber Seed Pie 1.
8368 Bitter Karól Pice 3.
8369 Bhoor Mooug (ground nut) Pice 5.
8370 Wheat Pice 3.
8371 Chenna (Gram) Pice 3.
8372 Toor Pice 2.
8373 Dhunea or (Coriander) Pie 1.
8374 Gingelly Oil As. 1-8.
8375 Karel Oil As. 1-3.
8376 Ambaree Oil Pice 6.
8377 Kurda or Koosm Oil As. 1-3.
8378 Ground nut Oil Pice 6.
8379 Cocoanut Oil As. 2-3.
8380 Poppy Seed Oil As. 3.
8381 Jowaree red 1st kind Pice 3.
8382 Mussoor Pice 5.
8383 Mutkee Pice 4.
8384 Kalabhat Sallee (Paddy) Pice 5.
8385 1 small Shameana Tent consisting of 1 inner Top, Walls, threefolds lined with Chintz, 1 outer fly, threefolds lined with red Jaconet and Walls lined with Chintz, 1 Centre Pole in two Pieces with a brass joining Tube, 12 side Poles, all complete with Ropes, &c. Rs. 122-6.
8386 Setrinjees to suit the Tent.
8387 1 Setrinjee As. 12-3.
8388 2 do. „ 13-3.
3 do. „ 13-3.
4 do. „ 15-3.
5 do. „ 12-2.
6 do. „ 12-2.

## MEMORANDUM.

The object of this Shahmeana Tent is to obtain the greatest space inside, most ventilation, most protection from heat, at the least expence of original cost and carriage and it is submitted that these objects have been attained.

A fault of all Tents, whether single or double poled is, that there is no ventilation except by the doors, and where a Tent is crowded with natives, as is the case in Public Cutcherries, or Durbars, the atmosphere becomes offensive and unwholesome. Very little air comparatively escapes or enters by a door ; and in a double poled Tent especially, the air is much confined by the ceiling or inner fly. At night in warm weather it is impossible to use a Tent with privacy, so as to secure air. This must have been experienced by all, who have used them continually.

In the Shahmeana Tent, the ventilation is perfectly secured by the contrivance adopted which is that the inner fly is raised to a height of twelve feet all round, or Ten as may be desired. The Kanats are six feet, and from the edge of the fly, a curtain depends which laces on to the Kanat where they meet, or which may be drawn up by a rope passing through a ring at each pole to form festoons all round. When the curtain is drawn up, a free current of air is admitted all round over the walls whether by day or night and in Durbar or Cutcherry, it will be found a great relief as removing the offensive smells and heat, which a body of people collected together promiscuously, will always give out. At night though all the doors may be closely shut by Purdas for privacy, the air received from above the walls, will be found sufficient for all purposes : and in hot weather, when it is necessary to close the Tent to apply Tattees or a Thermantidote, the curtain when laced down to the Kanat, keeps out hot wind as well, indeed better, I think than ordinary Tents.

Protection from Sun.—The inner fly which is nearly flat, or but slightly raised in the centre, is 12 feet above the floor. Above the fly is the outer or single poled Tent fly which is clear of the Shameana all round and the great space thus formed between the two flies, admits a perpetual current of air, mitigating the heat which otherwise exists, and is engendered when the space between flies of Tents is closely shut by outer walls.

From the edges of the upper fly, Sywans or extra Sun verandahs, are laced on all round. These, form a verandah eight feet wide all round the Tent which is open if the Tent have only single walls. But it will be obvious on inspection of the model, that as the verandah is closed on one side to form a dressing or bathing Room, that the whole of it all round could be closed or that Kanats could be fitted to two sides, which would perhaps be most convenient.

The Tent altogether combines the usefulness and easy carriage of the single poled Tent with extent of space afforded by a Double poled Tent, indeed in this respect, it is much superior. For instance, a Field officer's Double poled Tent made at the Jubbulpoor Institution $28 \times 16$ and costing 589 Rupees affords inside a space of 448 square feet. Whereas my Tent which with Sywans all round, enclosed on one side as in the Model, cost 550 Rupees in the same Institution, gives $24 \times 24 = 576$ square feet.

Now if the outer Verandah be added to the Double poled Tent, the dimensions would be $36 \times 24 = 864$ square feet. Whereas if all sides of the 8 feet Verandah be enclosed, as the one side is in the Model, the result is a square of $24' \times 8' \times 8' = 40'$ or 1600 square feet which is perfectly practicable. Indeed it is advisable that the Tent should be enclosed on two sides at least and these side Rooms while they make the Tent more compact and private, will be found of great use as Office Rooms of a Cutcherry, or as Dressing or Bath Room if a private Tent.

If two of these Tents are joined together for a large Durbar or ordinary use, as is perfectly practicable, a Room is found 24' by 48' without reckoning the outer Verandah; which if enclosed and the inner Kanats removed, would give a space of $40 \times 80$ with an uniform height of 12 feet.

Several great objections to large double poled Tents exist, which are familiar to all that have used them.

1st. The ridge pole may break, and render it impossible to pitch the Tent at all. If lascars let down a double poled Tent unevenly, i. e. one pole falls before another, the ridge pole reaches the ground slantingly and is very apt to snap.

In bad weather, a double poled Tent, if pitched broad side to a storm, or is taken on the broad side by heavy rain and wind, exposes a large surface which invariably leaks, because of the bag caused by the force of the wind and if the ridge pole breaks by the additional force and weight, the Tent is useless as shelter.

It is admitted by experience that a good single poled Tent will stand any gale or any weather, if only secured by bushing the Pegs and that it bags very little and is always dry.

Now the Shameana with a single poled Tent fly over it, is in fact a single poled Tent only with higher sides than usual. The outer fly is 24 feet square, the size of an ordinary 16 feet regulation Tent or it may be made a foot larger all round if needs be; or the Shameana 23 feet square, just as is preferred. If a single poled Tent have 4 feet Verandahs, the spread of outer fly is $16 \times 4 \times 4$ or 24 as explained already. The principle therefore and usefulness of the single pole are maintained while the advantage of space inside, ventilation and broad open or enclosed Verandahs, has been explained above. Large double poled Tents from their length at Top can rarely be pitched under Trees. The single poled top being a point, can be pitched under any large tree finding Room among the branches which is the case with my Tent also. The additional height is never found to be inconvenient if the Trees are ordinarily large ones.

Carriage.—It is often found impracticable to carry a large outer fly of a double poled Tent if wet—but an outer fly of a single poled Tent causes no inconvenience to Camels. It is lighter indeed at all times and the Sybans to my Tent are laced on after the outer fly is pitched.

For pitching a double poled Tent, two sets of ropes must be named and the fly drawn up evenly. For my Tent there is only one rope and it is pitched as easily and rapidly as any single poled Tent of 16 feet square.

As there is additional height, so the centre pole must be of additional strength and this is provided by the maker of the Tent. The lower portion of the pole of my Tent is 6' in diameter. The side poles which for 24' square Tent, are 12 in number, may be as slight and light as can be contrived—in my Tent they were 3' in diameter and straight Bamboos will answer very well.

A Tent on the above plan was made for me as a Cutcherry Tent in 1853 and this is the fourth season of use. It has been severely tried in heavy rains and storms, and was in constant use during the early part of the monsoon of 1854 when in was necessary for me to be in the field. It has never leaked, has been always cool, and in crowded Cutcherries and in the hottest weather I have always found it a great comfort.

I think the same principle, that is of raising the sides and admitting a free current of air, and also of securing additional coolness by additional height, may be applied to all single poled Tents however small and to whatever style of Tent it is applied, the result would be the same in proportion and equally convenient and satisfactory.

For instance.—The smallest Tent made as a single poled, is 10 feet squares. Hill Tent—the walls of which are five feet high. If the side poles on my plan be nine feet, the curtain required will be 4 feet. The outer Sybans 8 feet long will give a verandah of 6 feet broad, which if enclosed would give a space inside all of 22 square feet or if Sybans on two sides only of 22 by 10 or in any way required.

In short that the principle can be applied to any single poled Tent, 10 feet square to 16 inside with the advantages detailed.

Additional height does not except the poles, necessarily involve additional carriage. My Tent with the Sybans, goes easily on three Camels which is the allowance for a 16 feet square Tent. The Sybans of my Tent are in fact equal in weight to the outer Kanats of the Regulation Tent. The only extras are the 12 poles and each Camel carries four as they are very light. If the Sybans are enclosed, the carriage is of course increased—but in any case the objection attached to the very heavy fly of a Double poled Tent is avoided.

The side poles should be in the following proportions.

| | | |
|---|---|---|
| 24' | Square..... | 12 Poles. |
| 18' | Do. ..... | 8 do. |
| 14' to 10' | Do. ..... | 4 do. |

# HYDERABAD.

No. 5. of 1856.

To

E. G. BALFOUR, ESQ.,
*Secretary Committee, Madras Exhibition for* 1857.

SIR,

I am directed by the Resident to submit for the information of the General Committee,* the following remarks upon the Natron Lake of Loonar, along with specimens of its natural products, in order, that the General Committee, who have kindly undertaken the task, may take the necessary steps for ascertaining the exact chemical composition and commercial value of the salt.

* Madras Exhibition of 1857.

## DESCRIPTION OF THE LAKE OF LOONAR.

2. In the Circar of Meihker, Sowbah of Berar, about 45 miles N. W. of Hingolee, in Lat. 20° N. lies the curious Natron Lake of Loonar. It is situated at the bottom of a crateri-form depression, which forms a singular and unexpected interruption to the general gentle undulatory character of the district. The Lake is 510 feet below the level of the surrounding ground†—has a rounded outline and is about 3 miles in circumference. The sharp edge of the great excavation is about 5 miles round, and the inner surface of the bowl, rises abruptly at an angle of, from 75° to 80°. The surface of this sharp slope is covered with luxuriant vegetation, in the shape of trees,‡ and thick, vigorous underwood, tenanted by the Tiger, Hog, Panther, Deer and Peacock. Between the sloping bottom of the abrupt dip, and edge of the still, green, lake the ground, especially to the N. and N. E., is under cultivation; and the luxuriance of the crops, shews the excellence of the soil, and the abundance of the irrigation. Water is supplied freely from springs of sweet, soft water, close to the edge of the lake, and near the surface of the ground, as well as from the streams, which, in the rainy season, come from the surrounding water shed, and which have left their vertical traces upon the walls of the crateri-form hollow. Here and there, in the thick recesses of the wood, are observed small deserted and ruined Hindoo temples, built of the common compact trap of the district. Many years ago, an Officer, upon entering one of them, was seized and seriously injured by a Tiger. The lake, a still sheet of water, emitting an intolerable stench of Sulphuretted Hydrogen (especially during the heat of the day, when the gas rises in millions of bubbles to the surface of the water), has a bright green color, owing to the abundance of confervæ on portions of its surface, especially, near the edges. The mud close to the margins of the lake, is thick, black, salt and tenacious, from the mixture of Regur, Salt, and Alum. When dry, fan shaped, black, glassy crystals of carbonate of soda, are seen. The lake has evidently lately extended its bounds a good deal, as proved by this, that numerous dead trees are standing within its margin, (for every tree touched by the lake dies), and also by the fact, that a bowrie of sweet water, protected by a low wall is now completely surrounded by the water of the Lake. Reptiles, Fish, and Insects, are never found in the lake, but flocks of Teal and Duck dot its surface. The water has a salt and nauseous taste, and its emanations, are said to give rise to fevers of intermittent and remittent types.

† As calculated in January last by the Ancroid, which, during the descent from the focus of the crater to the level of the Lake, rose 6-10ths of an inch, nearly 510 feet.

‡ For List vide Appendix No. 4, Extracted from Surgeon Bradley's Memoir.

At two points near the centre of the lake, distant from each other about ½ a mile (judging by sight,) are two saline springs, which have never been known, even in seasons of extreme drought to become dry. It is supposed that the muriate of soda

MADRAS, C. E. S. PRESS—D. P. L. C. CONNOR, PRINTER.

9. The following specimens are forwarded for examination.

1. Dulla.
2. Nimuck Dulla.
3. Khuppul.
4. Puppree.
5. Madkhar.
6. Khooskee.
7. Travertin.
8. Quartz used in glass making.
9. Glass prepared for the manufacture of Bangles.
10. 3 Bottles of water.

I have the honor to be,

Sir,

Your most obedient Servant,

GEO. SMITH, M. D.
*Residency Surgeon.*

HYDERABAD RESIDENCY,
*10th March*, 1856.

# APPENDIX No. 4.

*Statement of Salt extracted in Loonar Lake from Fusly* 1252 *or A. D.* $\frac{1842}{1843}$ *under the Nizam's Government.*

| Brick Drills at Rs. 4 Annas per Candy. | | Chooreshat 39 Rupees 8 Annas per Candy. | | Khuppul at 35 Rupees per Candy. | | Paperee at 22 Rupees 4 Annas per Candy. | | Mixed Ammain Paperee at 17 Rupees 4 Annas per Candy. | | BHOOSKEE. | | | | | | MARSHKAR. | | | | | GRAND TOTA |
|---|---|---|---|---|---|---|---|---|---|---|---|---|---|---|---|---|---|---|---|---|---|
| Quantity. | Value. | Quantity. | Value. | Quantity. | Value. | Quantity. | Value. | Quantity. | Value. | Quantity. | Value at 1-10-0 per Candy. | Value at 10-14-9 per Candy. | Value at 11-14-0 per Candy. | Value at 20-14-0 per Candy. | Total Value | Quantity. | Value at 3-15-0 per Candy. | Value at 15-5-0 per Candy. | Total Value. | Quantity of Salt. | V |
| C. M. S. | Rs. A. P. | C. M. S. | Rs. A. P. | C. M. S. | Rs. A. P. | C. M. S. | Rs. A. P. | C. M. S. | Rs. A. P. | C. M. S. | Rs. A. P. | Rs. A. P. | Rs. A. P. | Rs. A. P. | Rs. A. P. | C. M. S. | Rs. A. P. | Rs. A. P. | Rs. A. P. | C. M. S. | Rs. |
| 0 10 6 | 1 4 0 | 0 3 1 | 0 13 5 | 1 7 7 | 3 2 15 | 0 2 0 | 0 14 0 | 0 0 0 | 0 0 0 | 0 6 0 | 1 10 0 | 4 5 7 | 0 0 0 | 0 0 0 | 4 5 7 | 0 0 0 | 0 0 0 | 0 0 0 | 0 0 0 | 0 8 7 | 0 |
| 2 8 1 | 9 5 4 | 0 3 1 | 0 13 5 | 1 7 7 | 3 2 15 | 0 2 0 | 0 14 0 | 0 0 0 | 0 0 0 | 0 6 0 | 1 10 0 | 4 5 7 | 0 0 0 | 0 0 0 | 4 5 7 | 0 0 0 | 0 0 0 | 0 0 0 | 0 0 0 | 0 8 7 | 0 |
| 0 8 3 | 0 11 3 | 0 6 7 | 1 8 3 | 1 7 7 | 3 2 15 | 0 2 0 | 0 14 0 | 0 0 0 | 0 0 0 | 0 13 0 | 3 5 0 | 0 0 0 | 0 0 0 | 0 0 0 | 3 5 0 | 0 0 0 | 0 0 0 | 0 0 0 | 0 0 0 | 0 15 7 | 0 |
| 0 5 0 | 0 6 8 | 0 3 1 | 0 13 5 | 1 7 7 | 3 2 15 | 0 2 0 | 0 14 0 | 0 0 0 | 0 0 0 | 0 6 0 | 1 10 0 | 4 5 7 | 0 0 0 | 0 0 0 | 4 5 7 | 0 0 0 | 0 0 0 | 0 0 0 | 0 0 0 | 0 8 7 | 0 |
| 0 4 3 | 0 5 6

# APPENDIX No. 2.

*Statement of Receipts and Disbursements on account of Salts extracted from the Lake of Loonar in the Months of April, May, June, and 20 days in July* 1855, *as an experiment.*

| Receipts. | Rs. | A. | P. | Disbursements. | Amount in Hyd. Rupees. Rs. | A. | P. | Total. Rs. | A. | P. |
|---|---|---|---|---|---|---|---|---|---|---|
| 35 Candies of Salt extracted from the Loonar Lake of the descriptions named, Dulla, Kuphull, Puppree, at Rupees 41–12 Annas per Candy of 340 Seers, - - - - - | 1,461 | 4 | 0 | Paid to Divers being one-fourth (Charum) for extracting the Salt from the Lake agreeably to former usage, - - - - - - | 365 | 5 | 0 | | | |
| | | | | Russooms to Zemindars on the Net produce at 5 per cent. agreeably to former usage, - - | 47 | 8 | 0 | | | |
| | | | | Russooms to Putwarrie on the Net produce at 2½ per cent. agreeably to former usage, - - | 23 | 12 | 0 | | | |
| | | | | Pay to Khamdar for Superintendence, for the months of April, May, June and 20 days in July 1855, at 10 Rupees per month, - - | 36 | 7 | 3 | | | |
| | | | | Purchase of three Canoes, - - - - - | 33 | 10 | 3 | | | |
| | | | | For ceremonies previous to diving agreeably to usage, - - - - - - - - | 10 | 5 | 3 | | | |
| | | | | Making up to Cots to float on the Lake, - - | 4 | 0 | 0 | | | |
| | | | | 40 Baskets, - - - - - - - - | 0 | 6 | 0 | | | |
| | | | | Scales for Weighing, - - - - - - | 0 | 8 | 0 | | | |
| | | | | Hire to Weighers, - - - - - - - | 0 | 12 | 0 | | | |
| | | | | | | | | 522 | 9 | 9 |
| | | | | Balance carried to credit of Government, - - - - | | | | 938 | 10 | 3 |
| Grand Total Hyderabad Rupees... | 1,461 | 4 | 0 | Grand Total Hyderabad Rupees... | | | | 1,461 | 4 | 0 |

Deputy Commissioner's Office,
*The 2nd March,* 1856.

(Signed) JAMES JOHNSTON, Major,
*Deputy Commissioner, Southern Division, Berar Districts.*

## APPENDIX No. 3.

*Analysis of Dulla Salt, by Mr. Reynolds, an Analytical Chemist of Clappam.*
*Extracted from Surgeon Bradley's Memoir—page 62.*

DULLA.

| | | |
|---|---|---|
| Soda | 32-0·8 | 67 |
| Carbonic Acid | 34-0·2 | |
| Water | 31 | |
| Chloride of Sodium | 2 | |
| Alumina a trace. | | |
| | 100 | |

67 of the Sesqui-Carbonate—equivalent to 56 per cent. of the neutral carbonate.

KHUPPUL.

Less soluble than Dulla—the equivalent of 52 per cent. of neutral carbonate being present.

LAKE WATER.

Specific gravity 1,055—(Bradley) Analysis of the Lake water (Malcomson) in 1000 grains.

| | |
|---|---|
| Chloride of Sodium | 29 grains. |
| Sesqui-Carbonate of Soda | 4-2 |
| Sulphate of Soda | 0-1 |
| Potass a trace. | |
| Specific Gravity. | |

| | | |
|---|---|---|
| 1. Of water from the Cow's Mouth | 1,000 | at 85° Fr. |
| 2. From Loonar Lake | 1,060 | |
| 3. From Bowrie of Sweet water in the Lake | 1,000 | |

(DR. SMITH.)

---

## APPENDIX No. 4.

*Trees found in the crata of Loonar (authority, Surgeon Bradley.)*

1. Sterculia Sereus.
2. Boswellia Serrata.
3. Eriska Tomentosa.
4. Cochlospermum Gossypium.
5. Borassus Flabelli Formis.
6. Tamarindus Indica.
7. Mangofera Indica.
8. Anona Reticulata.
9. Anona Squamosa.
10. Mechelia Rheedia.
11. Conocarpus Latifolia.
12. Layerstramia Parviflora.
13. Melia Azedorachta.
14. Butea Frondosa.
15. Dalbergia.
16. Cathocarpus Fistula.
17. Banhinia Tomentosa.
18. Prosopis Spicijeri.
19. Acacia Smithiaana.
20. Mimosa.

21. Poinciana Pulcherima.
22. Buchanania Latifolia.
23. Feroma Elephantum.
24. Grevia Cucifolia.
25. Helicteres Isora.
26. Capparis Horrida.
27. Combretum Aruminatum.
28. Clunates Gowriana.
29. Flacourttia Sepiaria.
30. Celasburs Montana.
31. Zyzyphus (3 var.)
32. Abrus Frecatorims.
33. Ficus Indica.
34. Do. Rely Rosa.
35. Do. Flomerata.
36. Clerodendron Phlomordes.
37. Dodonea Burmaniana.
38. Tectona Grandis.

---

## No. 14 of 1856.

To

E. G. BALFOUR, ESQ.,

*Secretary, Madras Exhibition for* 1857, *Madras.*

SIR,

Under instructions from the Resident, I have the honor to forward to you, for submission to the Right Honorable the President and Members of the General Committee, a plan and section of the Loonar Lake,* in illustration of my former communication on this subject.

* Despatched in tin case by bangby.

2. In the plan now submitted, the crateri-form shape of the hollow is well seen, and if the opinion of some Geologists be correct, namely, that this hollow is the crater of an extinct volcano, the interest felt in it must be deepened by the fact, that, in all probability it is the only one in Southern India.

3. The action, however, even of a large crater-like this must have been comparatively limited; other vents and fissures, which have left no permanent mark of their existence must have given exit to those vast sheeted masses of porous and solid rocks, constituting the trappean plateau of the Deccan. This plateau overlying primary and secondary rocks to depths varying from a few feet to 300 probably, covered with a rich mantle of inexhaustible black soil, and capped here and there along its eastern indented edge with laterite patches, extends from 17° to 27° N. L., and from 72° 30′ to 79° E. L.

4. It may be interesting to remark that at the South East angle of the plateau, the existence of numerous hot springs seems to indicate the persistence of igneous action. Taking Loonar as a centre, and with a radius of 150 or 200 miles, the quarter circle extending from the North East to the South East, will be found to include, *(a)* the tepid spring of Bedet, rising from the base of a laterite cliff; *(b)* the hot springs at Kair on the Pain Gunga (87° Bradley) and, *(c)* the hot springs near Salbundee (102° Bradley) lying in a North Easterly direction.

I have the honor to be,

Sir,

Your most obedient Servant,

GEORGE SMITH, M. D.
*Secretary.*

HYDERABAD RESIDENCY,
*6th June*, 1856.

*Resolved that a copy of this communication and Map be sent to the Professor of Chemistry, the School of Arts and the Madras Literary Society.*

---

## No. 17 of 1856.

To

E. G. BALFOUR, ESQ.

*Secretary, Committee Madras Exhibition for* 1857.

SIR,

Some months ago the Resident, anxious to encourage the introduction of manufactures in flax into the assigned Districts, offered rewards for the best specimens of flax fibre,

and of the same time expressed a hope that when the native manufacturers became aware of the existence of a fibre in the linseed plant—a fact of which they have hitherto been entirely ignorant—they would follow up this knowledge by attempting to work the fibre into cloth.

2. Specimens of fibres have already come to hand—and one specimen of coarse canvass cloth which is deserving of notice, less as a manufacture than as a proof of what has been done, and as an earnest of what may yet be done with suitable encouragement in the Districts, is now submitted by the Resident to the General Committee. This specimen was prepared, under very unfavorable circumstances, by a native manufacturer, in Northern Berar.

I have the honor to be,
Sir,
Your most obedient Servant,

HYDERABAD RESIDENCY,
*2d July*, 1856.

G. SMITH, M. D.
*Secretary.*

---

No. 20 of 1856.

To

E. G. BALFOUR, ESQ.,
*Secretary, Madras Exhibition for* 1857,
*Madras.*

POLITICAL DEPARTMENT.

SIR,

Under instructions from the Resident, I have the honor to inform you, that two bales of Hyderabad Cotton have been forwarded this day to your address by a cavady cooly.

2. According to reports of the Bengal Chamber of Commerce, the Cotton transmitted is of Sea Island Georgia stock.

3. The Resident will feel obliged by your obtaining from competent authorities an opinion regarding the value of this wool (if well got up) in the English market compared with indigenous Cotton, and with produce of the same stock grown in Southern India.

4. Enclosed is a copy of a Memorandum* referring to the cotton wool now transmitted to you for the purpose above specified.

* Hydrabad Residency, 26th March 1856.

I have the honor to be,
Sir,
Your most obedient Servant,

HYDERABAD RESIDENCY,
*9th July*, 1856.

GEORGE SMITH, M. D.
*Secretary.*

---

## MEMORANDUM REGARDING GENERAL LOW'S COTTON SEED, TRIED IN LIGHT RED SOIL AT UMBARRAPETT, NEAR HYDERABAD.

The seeds were sown in the beginning of June, at the first commencement of the rain at the distance of about 18 Inches from each other in lines two feet apart, to allow of the plants shooting and spreading out their branches without being checked or stunted by too close a proximity. They sprang up in 5 or 6 days, and in 75 days grew into trees of about four feet high with branches from top to bottom putting forth yellow blossoms succeeded by pods, which came to maturity in the course of about 45 days, and commenced bursting, disclosing a fine soft white wool. The pods were then picked and exposed to the sun, it having been thought proper to pick them as soon as they were burst, as otherwise the rain drops penetrating into them the cotton would have become discoloured and deteriorated in quality, but after the rains this mode of picking was dispensed with, and the cotton gathered in the field after it had been fully developed.

Sowing the seed at the distance above specified, 1½ lbs. have been sufficient for one Beegah of land, the yield of which gathered from the beginning of October to the end of February is 275 lbs. cotton and seed, which latter being separated the result is ¼ cotton and ¾ seed. A further yield of about 150 lbs. of cotton with the seed may be expected from March to the end of May, which will complete the gathering for the first year.

The present crop having been raised upon red high ground, it will be necessary to water it at least twice a month during the hot weather to prevent the plants from perishing till the next year, in which we may expect double the return of the first by its becoming better acclimated.

Very low red grounds adjoining hills which are called "Jheels" are well adapted for cotton cultivation, where it will be very productive without absolutely requiring irrigation in hot weather, and where a crop will stand out for three years, yielding each progressive year double and even treble the return of the first.

In like manner in black low grounds in the vicinity of hills and rivers a crop of cotton will thrive well for three years without irrigation, and be equally productive as in the red soil above mentioned; but in black soil at a distance from rivers and nullahs or other means of irrigation, and depending entirely upon the rains, the plants after the first year's yield will perish.

There are different descriptions of cotton grown here varying from each other in their peculiar qualities, for instance the *Burra Kapuss* so called from its pods being larger, and the fibres finer and longer than those of the *Chota Kapuss*, of which the fibres are very short and coarse, and the *Dewa Kapuss* or sacred cotton which is scarce and is so called from its being used by the Brahmins from its fineness and length of fibre for their sacerdotal thread and for wicks in temples. On comparison of General Low's cotton with the Chota Kapuss which is properly the indigenous and that grown in any great quantity in the country, the single filaments or fibres of the former, far surpass those of the latter in their exquisite fineness and remarkable length. The seed of the former is large and heavy and comes clear off the cotton which adheres so thickly and firmly to that of the latter, that it is difficult to separate and dissever it. But there is another difference which is particularly worthy of notice. One seer of the indigenous cotton with seed when ginned and weighed is said to give the seed and fibre in equal proportions, one half each; whereas the other gives ¼ fibre and ¾ seeds as before stated. This striking difference may be attributed to the largeness and solidity of these seeds compared with the indigenous which are small and light; but this deficiency, if it may be so considered in General Low's cotton seed is amply made up by its remarkable productiveness and staple quality and value of its wool, in which it surpasses all the species grown here, while it also has the advantage of being more fruitful as it becomes better accustomed to the soil. There is however very little difference between Dr. Riddell and General Low's cotton seeds, and in the cotton grown from them respectively as the accompanying specimens of both will show.

The method used in Hyderabad for separating the seed from the wool is also worthy of notice. As the cotton is not usually cleanly picked in the field, all fragments of the leaves, capsules, and stalks are carefully picked out previous to this operation. It is then spread out on a cot rattaned or platted with twisted rushes and thrashed with switches, when the minute particles of earthy or other extraneous matter still sticking to it fall through; but this process appears to be more particularly intended to loosen the wool from the seed to which it adheres in order to facilitate the operation of ginning. For this purpose the common churka or hand gin of which a sketch accompanies this Memorandum is used. It will be perceived that the instrument though rather clumsily constructed answers its purpose well, and being simple in every respect is peculiarly adapted to the village means and workmanship. The cotton is held at the two cylinders which are fixed in close contact, and more in opposite directions upon each other, by their ends on the right hand side being formed upon the principle of the Archimedian screw. The person employed at the operation (generally a middle aged woman) holds the cotton in one hand at the cylinders as above stated and turns the Machine simultaneously with the other—the cotton is thus drawn between the cylinders the seeds unable to pass through are separated and repelled back by the motion of the cylinders and they fall down on one side of the instrument, while the wool in continuous lumps on the other without being in any way injured.

True Copy.

HYDERABAD RESIDENCY,
26*th March*, 1856.

(Signed) A. R. THORNHILL,
1*st Assistant Resident.*

*Sketch of the "Churka" or Machine for separating the Seed from Cotton.*

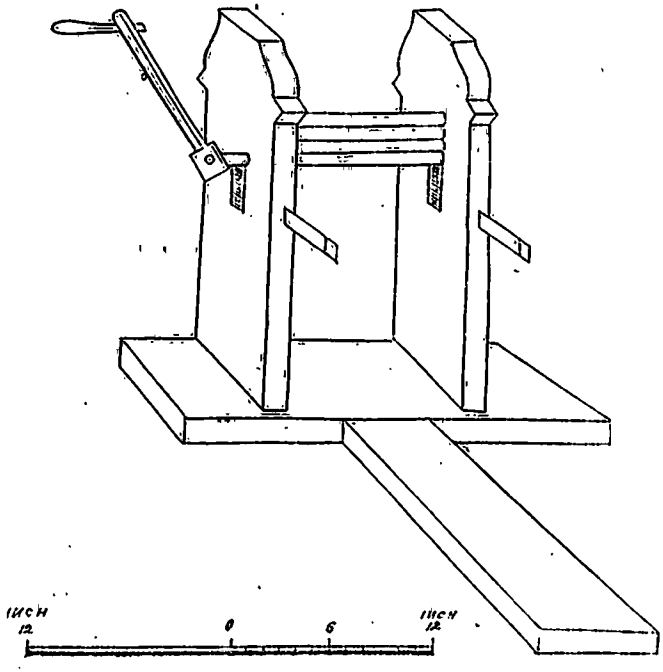

# TUTENAGUE WORK OF BEDER.

No. 4 of 1856.

To. E. G. BALFOUR, Esquire Secretary,

MADRAS EXHIBITION for 1857.

Sir,—On passing through Beder about two months ago, I thought it would be well, to make a few enquiries into the mode of manufacturing the unique and elegant ware commonly called Beddery ; accordingly I procured two workmen, who, partly shewed and partly explained to me the several stages of the manufacture ; the information thus obtained may assist those desirous of imitating this beautiful ware.

II. Suppose the vessel to be made, resembles in form the common small hookah bottom

(1)

(1). The steps of the manufacture are as follows :—

A mass of finely pounded and sifted old laterite dust mixed with cow dung, is put upon a rule lathe, and when dry is carefully turned into the correct shape. The lathe is rude and simple and is turned either by the hand alone, or by a short rope attached to a small piece of wood (2)

(2)

with the other hand the workmen holds a sort of chisel, with which he cuts and smooths the model.

III. The model thus carefully prepared, is next covered with a mixture of wax and oil boiled together (vide pattern) when dry, the whole mass is again turned, carefully thinned and smoothed.

IV. Over this coating is plastered a second layer of laterite dust moistened with water, but without cow dung—this coat is rough, and is not subsequently smoothed down (vide pattern.)

V. The next stage consists in boring two openings in the composite mould, and in placing it in the fire—the effect of this being to melt the intermediate layer of wax, and thus to leave a vacant space for the reception of the alloy.

VI. Into this space is poured the alloy (consisting of copper 1 part and Pewter 4) The vessel has now a dull leaden look (vide pattern) ; it is hard, but easily cut. This model or shell is carefully turned and smoothed.

VII. Upon the smooth surface of this shell, the pattern is etched by hand, a small pointed graver (like the pattern of the chisel, but only sharper at the point) being used. This etching is done rapidly.

VIII. The workmen next takes a small chisel and hammer (vide pattern of chisel), and following the lines of the pattern, cuts it deeply and expeditiously scooping out the tracings of the little leaves, &c., and leaving an intended but rough surface. This rough surface is next smoothed down by hammering gently with another blunt pointed chisel, and the space is then ready for the process of inlaying (vide pattern).

IX. Thin plates of very pure silver (vide patterns 4 and 5) are taken, and the little leaves are cut out with a small hammer and chisel—each little leaf is then raised separately by the chisel and finger tip, and hammered gently but carefully into the depression intended for it. This part of the process is tedious. In the more durable kinds of Beddery ware silver wire is substituted for the silver leaf.

X. The vase in this state is rough and requires smoothing—this is done with a

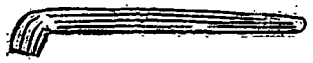

common file and with a curved scraper (1) of a rude and clumsy form.

XI. The hole in the bottom of the vessel is filled up with lead and is smoothed down—finally the vase is gently heated, and whilst warm, it is blackened by the application of a powder (vide muster), supposed to consist of chalky earth and muriate of ammonia—this imparts a brilliant black polish to the shell, and careful hand rubbing brings out the lustre of the silver.

XII. The value of the ware depends upon the thickness of the silver inlaying—the common ware of the bazaars rarely lasts long. Inlaying is also executed in the same way with copper leaf, but the artistic effect I think, is inferior to the silver. The Price of a small hookah bottom like that described, varies in Beder, from 7 to 10 Rupees.

XIII. It might be worth the General Committees while to ascertain, if any intelligent workman at Madras would undertake to imitate this elegant and durable manufacture.

XIV. The following patterns are forwarded, they will illustrate, at the next Exhibition, the several stages of the manufacture.

1. The first dust and cow dung model.
2. The wax coating.
3. The rough compound model.
4. The shell—shewing also the graving, the scooping out and the inlaying processes.
5. Half finished shell.
6. The cutting chisel.
7. The silver leaf—with an oral leaf cut out.
8. The polishing powder.

XV. I trust the General Committee will regard this communication as interesting, and the process as one deserving of attention.

I have the honor to be,
Sir,
Your most obedient Servant,
G. Smith, M. D.,
*Secretary,*
Local Committee.

Hyderabad Residency,
10th March 1856.

## Muddim Hunnooma of Bhunnoo Raichore Doalp, Exhibitor.

MEDICINAL PLANTS, &c.

9327 Streevussegeda. If the root of this be inclosed in a Talisman and worn on the body it will check bile.

Taleemurpooguddee. If the bulbons part of the root of this tree be grounded to powder and mixed in flesh and then given to the taimed birds they will follow you wherever you call them.

Rajavirssiageda. If the root of this be worn on the head it will cure head ache.

Nelthelguddee. If the root of this be grounded to powder and taken with sugar it will cure Lumbago.

Kuttegurgnagida. Do do with Bishop's weed it will cure syhpylis

Chendrakautigeda. Do do with sugar it will cure the fever in the bones.

Boochuckragudda. Do do with sugar and milk it will give strength.

Billagunjeegudda. If this is rubbed in lime juice and applied to the eyes it will cure ague.

Pooroosharntna. If the powder of the root of this tree be taken with sugar it will cure the pains about the legs.

Hoolguncheckkee. In case if any medicine was given internal or any raw flour taken inwardly, if the powder of this be taken with milk it will cause them to be thrown up.

Chittipallah. If the powder of this be taken with Pepper and Garlic (Powder) it will cure the fever caused by cold.

Rutnapoorsha. Do with sugar it will give strength

Daneekantree. If this is enclosed in a Talisman and tied round the head it will cure the pain of the eyes caused by cold

Kanuchomar. If this be taken with Bishop's weed it will cure the stomock pain

Sooryakanee. If the powder of this be taken with sugar it will cure billions fever

Ramagoola. Do do in honey it will cure asthma

Vistookantee. Do do with sugar it will cure Rhemmatic fever

Kirree Nellee. If the power of this be taken with Bishop's weed it will cure consumptive fever

Utuchmahindee. Do do in Goat's milk it will make a man feel no pain whatever altho he has travelled for any distance

Bennutteeguddah. Do do in honey it will cure the acute Rheumatic pains in the sides

Puchareegeda. If this be enclosed in a Talisman man and tied to Childrens bodies no evil spirits will attack them

Setalivurree. If the powder of this be taken in milk it will give strength

Goormuddee. If this was rubbed with water and applied to venerial ulsers it will cure it

Venee Kudlay. The powder of this if taken in milk it will cure Ghonorrea

Kondisree. If this is folded in a Betel and kept between the jaws, swollowing the juice thereof, it will cure caugh

Murootanaguddee. If the powder of this be taken with sugar it will cure bloody Ghonorrea

Kempagungeelee. If this is rubbed in water and put into the nose it will cure the disease in it

Muyoorasiky. If this is burnt and mixed in honey and then applied to the eyelids it will cure the pains thereof

Junuavussia. If this is enclosed in a Talisman and tied to the body it will prevent the effects of evil eyes

Hebbavingeda. If the powder of the bark of this tree be taken with sugar it will cure the Rheumatic pains in the jonits

Kypurvoola. If the powder of this be taken in cold water it will cure itch

Gootuthsaba. Do in warm water it will cure Lockjaw

Hulbee Bootaratchee. If this be burnt with Benjamin it will cast out evil spirits

Kudmuctah. If this is taken in milk it will give strength

Sahadaivee. If this powder is taken with Betel it will counteract the poison that has been swallowed up

Suldee Nararania. If this was burnt and mixed with cast or oil

and applied to ulcer on the navel it will cure it

Kolhonnee. If this powder is taken with the husk of Bishop's weed, in cold water, it will cure the inward fever

Moolasonda. If the powder of this be taken in cold water it cure consumptive fever

Kurra hickee. If this is mixed with Garlic and applied to the middle of the head in the shape of a small round plate it will cure lockjaw

Urnee Mullijee. If the powder of this be taken in honey it will improve the voice

Ahdoo Moottadageda. Do in water it will cure the bite of a green snake

Kurra Chittramoola. Do do spleen

Hirragoolud. Do in honey it will cure any kind of caugh

Unkoleed. If this is tied in a piece of Cloth and worn in the body it will guard against the influence of the tales that may be told against one

Kunerageda. If this togother with Benjancore be burnt it will remove the effects of the evil eyes cast on children

Soolageda. If this is with and sugar it will cure the Rheumatisin in the joints.

Captain M. Davies Superintendent of Police North Berar Exhibitor.

9314 Cotton Model churka loosen the top screws to work it.
9315 Do. small.
9316 Piece of aloe fibre canvas.
9317 Do. Of creeper plant called Doodee.
9318 Bag of quill Salep from adjunta range of Hills.
9319 Bundle of Twine from aloe fibre.
9320 Do. Of Twine from straw of the "Poee" plant.
9321 Piece of Clothand thread from Dr. Reddells cotton seed.
9322 Bulbons root / Tuberons root } from Adjunta Hills
9323 Wild Boar's Tusks.
9324 Piece of Gum of the Mowee Tree *not* "Mowah."

# KURNOOL.

## Nabob of Banaganapilly Exhibitor.

LACQUERED WARE.

1 One Laquered Charpae 33 11-0
2 One do Rs. 33-11-0 do
3 One do Almirah 32 0 0 do
4 Chaka Fibres and Cords.
5 Chaka putta.
6 Chaka Cloth.
7 Benda Fibres.
8 Palmirah Fibres.
9 Date Fibres and Cord.
10 Hemp Fibres.
11 Ganja Fibres.
12 Madoopoo Fibres.
13 Yapa Fibres.
14 Goag Fibres.
15 Yanyga Calabuntha Fibre.
16 Yerca Fibres.
17 Cripper Fibres.
18 Plantain Fibres.
19 Wild Plantain Fibres.
20 Goagoo Fibres.
21 Fibres.
22 Cloth.
23 do.

LOCAL COMMITTEE EXHIBITORS.

MATTING.

24 Mat Rs. 1-14

MINERAL KINGDOM.

25 Lithographic slab Rs. 5
26 Lithographic do. 2.
27 Slab.
28 Stone.
29 Stone called Bulpum, 1st sort.
30 Stone from the Village Nundial.
31 Stone called Bulpum 2d sort.
32 Copper stones, Gunny.
33 Indigo, from Bundiatcour.
34 Stone from the Village of Baithem cheroo.
35 Stone called coorontha.
36 Amica Abruck.
37 Iron stones from Chinnadaivalagroorum.
38 Wrought Iron from Cumbalore.
39 Galeva.
40 Raw Iron.
41 Stone called soonnamooky.
41 Saltpetre 1-4-0.
42 Coloured skins 7-0-0.
43 Almirah 32-0-0.
44 Large Tray 4-0-0.
45 do. do.
46 Small do.
47 Small do. 1-8.
48 Inkstand 2-0-0.
49 Inkstand 2-0-0.
50 A pair of Shoes 3-2-8.
51 A pair of slippers 7-0-0.
52 A pair of slippers 5-0-0
53 Cap. } 20-0-0.
54 Jacket. }

## Blacksmith Tooljeram, Exhibitor.

56 Tiger face sword called Abbasee Rs. 100.
57 Sword called Khandah Rs. 50.
58 Sword Elephant faced handle Rs. 100.
59 Sword called Abree Abassee Rs. 40.
60 Sword Sorabee Rs. 60.
61 Sword Abbasee Rs. 40.
62 Sword Asseel Rs. 40.
63 Poniard Bunk Rs. 20.
64 Knife Karobee Rs. 15.
65 Steel cap called Tope Rs. 50.
66 Steel cap Rs. 40.
67 Steel breast and back plates called Charina Rs. 15.
68 Gauntlets Dustana ea. Rs. 15 or 30.
69 Steel Jacket Rs. 100.
70 Horse Bit Rs. 5.
71 Coarse Steel Jacket Zeerah Rs. 15.
72 Do. do. do Rs. 15.

---

## Zeengur Venkojee, Exhibitor.

73 Peacock Punkah Rs. 5.

---

## Captain J. G. Russell, Exhibitor.

74 Peacock Punkah Rs. 4.
75 Peacok Punkah Rs. 4.

---

## Head Dewan, Venket Row.

76 Painted Fan Rs. 4.
77 Painted do. Rs. 3.

---

## Jemadar Mosum Khan Exhibitor.

78 Painted Fan Rs. 3.

---

## Ramasawmy, Goodoor Exhibitor.

79 Woman's cloth silk Rs. 25-7.
80 Woman's do. do. Rs. 18-4.
81 Woman's do. do. Rs. 15-8

---

## Captain J. G. Russell Exhibitor.

82 White Cumbly Rs. 3.

---

## Masum Saib, Exhibitor.

83 Horse Bit Rs. 3.
84 Kaucha Rs. 1
85 Purumb As. 12.
86 Water Bridle As. 4.
87 Colored Tape As. 8.
88 White Do. As. 4.
89 Iron Plough As. 10.

# KURNOOL.

Sowcar Ramasawmy Exhibitor.

90 Woman's cloth Rs. 3-8.
91 Do. Rs. 3-3.
92 Do. Rs. 3 3.
93 Do. Rs. 2.

Ghoolam Saib Exhibitor.

94 Turband Rs. 5-8
95 Turband Rs. 4.

Joharry Hussen Mahomed.

96 Soojny Rs. 6.
97 Do. Rs. 4.
98 Do. Rs. 4.
99 Carpet Rs. 3.

Captain J. G. Russell, Exhibitor.

100 Black Cumbly Rs. 2 8.

8073 Tocham Kusoos 1 Kacha seer As. 8.
8074 Halila Kabili As. 4.
8075 Chooboolullas As. 8.
8076 Furfeun As. 8.
8077 Todari soofed As. 8.
8078 Hoot ki siya As. 2.
8079 Hing As. 6.
8080 Zira kirmani As. 4.
8081 Tochum Kunocha As. 1.
8082 Todari Soorch As. 8.
8083 Gool Resta As. 8.
8084 Gokhra Hoord As. 1-5.
8085 Bahmuni soorch As. 12.
8086 Ajowani Horasani As. 4.
8087 Bullila
8088 Iagundunagoori As. 2.
8089 Tochum Balungoo As. 6-6.
8090 Pipplian As. 3-6.
8091 Hulila Zurd.
8091½ Jamal Ghotta As. 3-6.
8092 Samurpillas As. 4.
8093 Dumulachivain Rs. 2.
8094 Sout As. 2.
8095 Indeijaw As. 2.
8096 Charman Kagond As. 1.
8097 Majoophul As. 6.
8098 Sarsaparilla As. 3.
8099 Moosli Siya As. 3.
8100 Cheraita As. 4.
8101 Dalchini Sulani As. 6.
8102 Ral As. 2.
8103 Filfel soofed As. 4.
8104 Kikur ka Gonda As. 2.
8105 Moosli soofed As. 2.
8106 Isbaghol As. 1-2.
8107 Katira Gond As. 3.
8108 Jaoshir Rs. 1.
8109 Ghota Ghutta Rs. 2.
8110 Unzuroot As. 4.
8111 Zirki As. 3.
8112 Piplamor As. 4.
8113 Zungsurmachi Rs. 2.
8114 Kaknaj Rs. 1.
8115 Kundoor As. 2.
8116 Ukur kura As. 4.
8117 Suckmoonia Rs. 1-8.
8118 Hulila siya As. 1-6.
8119 Badian Chutayi As. 3.
8120 Sang sullajit As. 2.
8121 Jutamasi As. 4.
8122 Talub Misri As. 2.
8123 Tigra As. 4.
8124 Uftimoon As. 4.
8125 Behdana As. 8.
8126 Hubulzam As. 8.
8127 Girdah sumak Rs. 1.
8128 Mochurs Rs. 1-2
8129 Mastuki Rs. 1-4-4.
8130 Rutla soofed As. 4.
8131 Bajbund As. 8.
8132 Pista As. 4.
8133 Dana Illachi As. 4.
8134 Rubusoos Rs. 1.
8135 Tirmas As. 8.
8136 Mahmira Rs. 1-4.
8137 Bahmuni soofed As. 10.
8138 Kosht As. 3.
8139 Uka kia As. 3.
8140 Rusuth Rs. 1.
8141 Menthphal As. 2.
8142 Unni soon As. 3.
8143 Taj Ps. 9.
8144 Unnah As. 4.
8145 Jungli Badam.
8146 Hubool far 1 tola Rs. 2.
8147 Sapista Rs. 1.
8148 Tachum Konch As. 4.
8149 Aloo Buchara As. 4.
8150 Frunjimish As. 4.
8151 Jochum Talmukana As. 2.
8152 Moordar sing As. 2.
8153 Badam Talch As. 2.
8154 Churdul soofed As. 3.
8155 Tochum Shubut As. 1 4
8156 Goolnar As. 8.
8157 Philphel siya As. 2-8.
8158 Gool soorch As. 3.
8159 Salpurnel As. 3.
8160 Jauzboya Rs. 1-2
8161 Hufuralihood Rs. 1-4.
8162 Numuk sendha As. 2.
8163 Plaspapura As. 2.
8164 Kumela.
8165 Sazuja Udsi Rs. 1.
8166 Churnoob Rs. 1.
8167 Ukilulinrolk As. 8.
8168 Tochum Chaksoo As. 2.
8169 Tochum Chiar As. 4.
8170 Tochum Kuddoo As. 1-6.
8171 Post Duracht Maulsar.
8172 Tochum Charbooya As. 1-8.
8173 Tochum Kasni As. 2.
8174 Nila Tota As. 5.
8175 Ashba Myghouty As. 2.
8176 Nishasta As. 2.
8177 Papurkhar As. 2.
8178 Badian As. 1.
8179 Koochla As. 1-8.
8180 Malkunguni As. 3.
8181 Tochum Kurfas As. 4.
8182 Badawurd Rs. 1.
8183 Kuzmazuj As. 1-8.
8184 Sipistan As. 1-8.
8185 Tochum Hunduna As. 4.
8186 Tootiyar Sullak As. 8.
8187 Bartung As. 1-8.
8188 Sunna Muki As. 2.
8189 Tocham Chitmi As. 4.
8190 Usluboos As. 2.
8191 Shahudanunj As. 1.
8192 Goob Ghafus Rs. 8.
8193 Loban Soofed As. 8.
8194 Tochum Guzur As. 2.
8195 Gool Bunufsha Rs. 1.
8196 Zurnab As. 2.
8197 Choob Kulan As. 4.

8198 Khurdmana Rs. 1.
8199 Numuk siye As. 1.
8200 Tochum Petha Rs. 1.
8201 Tochum Kangni As. 2.
8202 Chushchush siye As. 4.
8203 Gawzuban As. 6.
8204 Tubashir Rs. 1-4.
8205 Sat Galaoo As. 8.
8206 Sungreza As. 1-6.
8207 Nirmali As. 1-6.
8208 Gool Gawzaban As. 1.
8209 Choob Kilkil As. 4.
8210 Tochum Churjah As. 1-6.
8211 Jochum Chubazi As. 4.
8212 Hujir As. 4.
8213 Bech foolaba Rs. 1-8.
8214 Unnaboosaleb As. 3.
8215 Shubeamani As. 3-8.
8216 Buzvelbung As. 4.
8217 Tochum Humaz As. 2.
8218 Hira Aeshush As. 1.
8219 Tochum Kitram 1 Tola As. 2.
8220 Akrot Rs. 2.
8221 Tochum Jyrji As. 1.
8222 Gokhroy Kulan As. 1.
8223 Googul As. 1-4.
8224 Eliva As. 2.
8225 Sundul As. 2.
8226 Birbuhooti 1 Tola As. 4.
8227 Duroonug Ukiubi As. 8.
8228 Hili Zeri.
8229 Nawsagur As. 1-4.
8230 Mungith As. 4.
8231 Gharikoon As. 2.
8232 Chul Ghoza Rs. 1-4.
8233 Shukad As. 2.
8234 Booloot Rs. 2-8.
8235 Regkami 1 Tola Rs. 1.
8236 Guli Kubursi As. 1.
8237 Sundul Soorch As. 1.
8238 Tochum Kanwul Rs. 1.
8239 Gool Kiloofur As. 8.
8240 Ogur Ghurchi Rs. 1.
8241 Bumuk Kanch As. 2.
8242 Kulaunyi As. 2.
8243 Shir Chisht Rs. 4.
8243½ Belphuk
8244 Gool Bel.
8245 Saduj Hindee.
8246 Badraj Boya As. 4.
8247 Shatna.
8248 Ajwayun.
8249 Shuka kul Misri 1 Tola As. 2.
8250 Zurawundigird 1 Tola As. 1.
8251 Burg Biriani.
8252 Kusondi As. 1.
8253 Churela Rs. 2.
8254 Jawarishoodtoorsh 1 Tola Rs. 53.
8255 Noushdaroosadab 1 Tola As. 1.
8256 Luboob Kubir 1 Tola As. 3.
8257 Mufurabarid 1 Tola As. 3-4.
8258 Sherbet Nilofur 1 Seer As. 8.
8259 Sherbet Nugoor 1 Seer As 8.
8260 Sherbet Ananus Rs 1-8.
8261 Sherbet Abreshum As 2.
8262 Belkibuffi Rs 6.
8263 Urn Badian 1 Bottle As. 4
8264 Goolab 1 Bottle Rs 1.

# MADRAS

Is represented by a very miscellaneous collection of Articles. It possesses no special or peculiar raw products either mineral or vegetable, and though in the various villages of which the Town is composed, manufactures are carried on to a limited extent, they are not of such a nature as to give it much claim to attention. The chief manufactures are Common Cloths and Handkerchiefs, Pottery ware and Ropes : it possesses also oil mills, several tannery and dyeworks, and there are various other trades scattered up and down but none carried on to such an extent as to call for much notice.

It is as the seat of Government, as the Metropolis of Southern India, and the principal Sea Port on the East Coast of the Peninsula that it is chiefly noticeable. In regard to the last mentioned feature, it is not necessary to enter deeply into details, for which reference must be made to "The Report on the External Commerce of the Madras Territories for the Official year 1855-56." It will be sufficient to say, that not withstanding the unfavorable nature of the coast, the want of a pier, and the expense of transporting goods in the Two Ton Massulah Boats, by which all communication with the shipping is carried on, there has been an increase in Imports since the preceding year of Rs. 33,24,920.

Under the 1st Section, that of Raw Materials and Produce, may be specially mentioned a very interesting assortment of Sugars, Rice, Wools, Silks and Cottons from different parts of the world, the property of the Chamber of Commerce, and a large collection of drugs, vegetable, mineral, and animal, exhibited by Dr. Jesudasen, N. S., the list of which it has been necessary to postpone printing, owing to its length and the late period at which it was received.

There is also a neatly arranged series of indigenous dye stuff, exhibited by Francis Appavoo, Botanical Assistant, Medical College.

Section No. II, "Machinery," is perhaps the one most fully represented, the various Government Establishments and the Railway Company being the chief contributors. Large and well assorted collections of tools and machines, some of which are so arranged as to be worked, form the contributions of the Arsenal, the Gun Carriage Manufactory and the Railway, and the Government Printing Office sends an American press, and a machine for taking proofs, both of which will be occasionally at work. Under this head also may be included a few Engineering Models exhibited by Mr. R. Kennedy and others, a series of Models from the Artillery Depot at St. Thomas's Mount, and three machines for driving punkahs with water power.

Section III is also well represented, and in this the department of Manufactures, there are more Native Exhibitors than in any other. There will be found a great variety of Cloths both for men and women; Arnee and other Muslins; Jewellery and Cabinet work. The School of Industrial Arts has produced a large and varied assortment of pottery both for useful and ornamental purposes, and Mr. Deschamps exhibits some very handsome furniture and carved work. It may here be noticed that the Lotus Flower Stand No. 5087 exhibited by The Hon. Sir Christopher Rawlinson was made by Capauley Aucharry of Venoyagur Street, Triplicane, at a cost of Rs. 250. A very interesting table having reference to the Ropes exhibited by the Arsenal is subjoined, shewing the relative strength of Country and English of various thickness, and, along with these, are specimens of the fibres from which the Country Ropes are made.

*Report on certain Specimens of Rope made from the Sun Fibre, in the Arsenal of Secunderabad, and tested comparatively with Europe Rope of the same size last received from England, both in a dry state and after being saturated with water for 24 hours.*

| | ROPE, SUN FIBRE. | | | | | | | | | | ROPE, EUROPE. | | | | | | | | | |
|---|---|---|---|---|---|---|---|---|---|---|---|---|---|---|---|---|---|---|---|---|
| | As Received. | | | After Trial. | | | | | | | Before Trial. | | | After Trial. | | | | | | |
| | | | | Dry. | | | Wet. | | | | | | | Dry. | | | Wet. | | | |
| | Length. | Weight. | No. of threads to each strand. | Weight sustained on breaking. | Length. | Dimensions. | Weight sustained on breaking. | Length. | Dimensions. | | Length. | Weight. | No. of threads to each strand. | Weight sustained on breaking. | Length. | Dimensions. | Weight sustained on breaking. | Length. | Dimensions. | |
| | Yards. | lbs. | Ozs. No. | lbs. | Yards. | Inch. | lbs. | Yards. | Inch. | | Yards. | lbs. | Ozs. No. | lbs. | Yards. | Inch | lbs. | Yards. | Inch | |
| 5 Inch. | 47½ | 104 | 0 33 | 9167 | 48⅝ | 4½ | 8524 | 47⅓ | 4⅝ | | 18½ | 47 | 0 39 | 7628 | 18¾ | 4⅝ | 9084 | 18⅝ | 4¾ | The SunFibreRope 5 Inch. has 4 strands 3⅜ threads each, whereas the 5 Inch. Europe Rope only 3 strands of 36 threads, being 132 threads for the former and 117 for the latter. |
| 3½ ,, | 52 | 63 | 0 25 | 5111 | 52⅛ | 3½ | 5424 | 50 | 3⅜ | | 21⅓ | 25 | 0 18 | 4920 | 22⅛ | 3⅜ | 4477 | 22⅓ | 3⅜ | |
| 3 ,, | 53½ | 41 | 0 16 | 4407 | 54⅛ | 2⅞ | 4080 | 51⅓ | 3 | | 19⅔ | 18 | 0 14 | 3365 | 20 | 2⅞ | 3861 | 20 | 2¾ | |
| 2 ,, | 53 | 21 | 0 8 | 1720 | 53⅜ | 1⅞ | 1639 | 51⅓ | 2 | | 20⅓ | 8 | 0 10 | 1532 | 20⅜ | 2 | 1990 | 20⅜ | 2 | |

REMARKS.—The Artillery Gyn has been used—under pressure—22½ feet.

Both kinds of Rope by the Weights they sustained shew good results. On a former occasion, when testing Rope made of Sun Fibre at Secunderabad, it was remarked, "The Fibre appears good, and under skilled management might make good strong Rope." The result as above shews that it has sustained the opinion then formed of it. The Rope is much harder, well twisted, and much better made than the former Specimens received from Secunderabad.

ARSENAL, FORT ST. GEORGE,
21*st January* 1857.

Under Section IV. Sculptures, Models and the Plastic Art, may be noticed a few very good oil paintings, a considerable number of photographs, and one or two sculptures and casts, as well as a collection of coins of Southern India, the most complete, it is believed, that has ever been made, exhibited by the Hon. Walter Elliot, Esq., and a smaller one of various countries, the property of Lieut. H. P. Hawkes.

Taking a general view of all that has been effected, the Local Committee look with some degree of satisfaction at the result of their efforts, and they are not without hopes that considerable good may be effected by the occasional (but not too frequent) repetition of these Exhibitions, a result in which they, in common with all who are engaged in the work, will find an abundant reward for all their labors.

MADRAS, 12*th February*, 1857.

---

## LOCAL COMMITTEE.

W. E. UNDERWOOD, ESQ., *President*.
JOHN ARATHOON, ESQ.,
A. ALWAR CHETTIAR,
A. J. BYARD, ESQ.,
R. O. CAMPBELL, ESQ.,
B. CARDOZO, ESQ.,
B. CUNLIFFE, ESQ.,
C. V. CONNIAH CHETTIAR,
DR. G. W. FLYNN,
ITAMUD OOD DOWLAH BAHADOOR,
RAJAH JANEKERAN,
EDWARD LECOT, ESQ.,
N. C. MOORAGASEM MOODELLIAR,
HAJEE MAHOMED BAKIR SHERAJEE NEMAJEE,
NANAH TAUKIR,
R. W. NORFOR, ESQ.,
HAJEE PATCHA SAHIB,
J. B. PHAROAH, ESQ.,
C. RUNGANATHUM SHASTRY,
P. SOOMASOONTHRUM CHETTIAR,
MAJOR A. C. SILVER,
WILLIAM SIM, ESQ.,
P. VEERAPERMALL PILLAY,
J. T. MACLAGAN, ESQ., *Hon. Secretary*.

MR. CHARLES SIMEON, EXHIBITOR.

4748 Treatise on Hindu Castes, Rs. 1.

R. RIDDELL, ESQ., EXHIBITOR.

4749 Manual of Gardening for Western and Southern India.

MR. WILLIAM HAYDON, EXHIBITOR.

4750 American Cotton, Green seed Cotton, Cuddapah Cotton, Bellary Cotton, } Grown at Tripagooly, Conjeveram.

4750½ Cholum Tree with 9 branches and seeds.

MR. W. BOALTH, EXHIBITOR.

4751 Three dozen silk handkerchiefs, Rs. 1-2, each.

Y. MOORAGASEM MOODELLIAR, EXHIBITOR.

4752 Book of drawings on talc, Rs. 4.

MADRAS GOVERNMENT, EXHIBITORS.

4753 *Model of a Sircy Cart made at the Gun Carriage Manufactory.*

CHARACTER OF THE CART.—"A species of conveyance much in use at Sirey, and which has attracted considerable attention on the part of the Government on account of the unfavorable mention made on all sides of its detrimental effect on the Public thoroughfares of the District."

"Carts of this description are constructed in the "Towns of Kittoor and Hoobly of the Dharwar "District. The cost varies from Rs. 20 to 24 per "Cart, according to the height of the wheels and "thickness of Tire. The height of the wheel varies "from 1½ to 2½ feet in diameter, the Tire being "generally from 1 to 1½ inches thick."

"The wood of the "Hona Mura" is in most re"pute for wheels, but as it is often hard to get it of "sufficient size, the wheels are very frequently made "up in 3 separate pieces, which are shaped and "fitted together."

"These Carts are said to continue service"able some 30 or 40 years."

"As much as 70 Maunds and upwards of "Cotton are piled on a single Cart and drawn "by 2 or 3 pairs of Buffaloes or oxen."

"These rude uncouth vehicles possess no mer"it or advantage over the neater looking and "more modern Bandy in general use along our "thoroughfares."

(Signed) J. D. ROBINSON,
*Sub Collector of Canara.*

4753½ *Model of a V Cart made at the Gun Carriage Manufactory.*

CHARACTER OF THE CART.—Carts of this pattern were originally invented by the late Captain S. Best of the Engineers, and they are highly recommended by the Sessions Judge of Chingleput for use with Convicts on account of the advantages they possess over the Common Country Carts in the following instances:

1st, They are much lighter.

2nd, More easily drawn and managed.

3rd, Do not require new Baskets as the old muster did.

4th, They carry fully one third more.

5th, They are more easily loaded and unloaded; and, lastly, after repeated trials, it was found that in consequence of these advantages, 4 men with these V Carts could in a day convey fully double the quantity of broken stone or gravel, that 6 men could with the old Carts, and the Prisoners prefer working in the V Carts to working in the old ones which are the usual Bullock Bandies with heavy Poles and Yokes.

The price of each Cart is about 5 Rupees more than the ordinary Bullock Bandies and can be made up at Chingleput from 40 to 42 Rupees.

It is recommended that the sides where the shafts are fixed should be made of Teak wood Planks 2 inches thick, the rest 1 inch thick. The axles not having any wooden Bed should be stronger than the ordinary Bullock Bandy Axles, and the whole should be banded together with common iron hooping.

THE MADRAS MILITARY BOARD, EXHIBITORS.

*Country Tools purchased from the Bazars.*

| | | R. | A. | P. |
|---|---|---|---|---|
| 4754 | Adze, Iron, Carpenter, ... ... | 0 | 14 | 0 |
| 4755 | Bit, Drill, ... ... ... ... | 0 | 2 | 0 |
| 4756 | Chisel, Country Carpenter's 1¼ Inch | 0 | 7 | 0 |
| 4757 | do. „ „ 1 „ | 0 | 6 | 0 |
| 4758 | do. „ Mortice ¼ „ | 0 | 3 | 6 |
| 4759 | do. „ „ ⅜ „ | 0 | 4 | 6 |
| 4760 | do. of sizes, ... ... ... ... | 0 | 4 | 0 |
| 4761 | Compasses, Iron, Carpenter's... | 0 | 6 | 0 |
| 4762 | Drill Bow, ... ... ... ... ... | 0 | 2 | 0 |
| 4763 | Drill with Socket, ... ... ... | 0 | 3 | 0 |
| 4764 | Driver's Screw, ... ... ... ... | 0 | 4 | 0 |
| 4765 | Gauge Carpenter Common, ... | 0 | 1 | 0 |
| 4766 | Hammer hand with handle, ... ... | 0 | 5 | 0 |
| 4767 | Mallet, wooden ... ... ... | 0 | 1 | 6 |
| 4768 | Plane, Rabetting ½ inch, ... .. | 0 | 3 | 6 |
| 4769 | do. „ ⅛ „ ... ... | 0 | 3 | 6 |
| 4770 | do. „ 1 „ ... ... | 0 | 3 | 6 |
| 4771 | do. Hollowing, ... ... ... | 0 | 3 | 6 |
| 4772 | do. Iron, Carpenter, ... ... | 1 | 6 | 0 |
| 4773 | Rule, wooden, Carpenter, 3 feet, | 0 | 1 | 6 |
| 4774 | Saw, hand ... ... ... ... ... | 0 | 10 | 0 |
| 4775 | do. Tenon, ... ... ... ... | 0 | 8 | 0 |
| 4776 | Square, Carpenter, wooden large,... | 0 | 3 | 0 |
| 4777 | do. „ „ small | 0 | 1 | 6 |
| 4777½ | Sharpening Block ... ... ... | 0 | 1 | 6 |

SUB CONDUCTOR GEORGE STEVENSON, EXHIBITOR.

*Articles made at the Gun Carriage Manufactory.*
*Intrenching Tools.*

| | | R. | A. | P. |
|---|---|---|---|---|
| 4778 | Axe, Pick, Country 10 lbs.... | 1 | 10 | 9 |
| 4779 | do. „ „ 5 „ ... | 0 | 15 | 8 |

| | | R. | A. | P. |
|---|---|---|---|---|
| 4780 | Axe, Pick, Country, Miner's, with helves, Europe, 10 lbs. ... | 2 | 1 | 4 |
| 4781 | do. „ „ „ „ 5 lbs. ... | 1 | 4 | 5 |
| 4782 | Bar Tamping Brass 3 feet. | 6 | 4 | 4 |
| 4783 | do. Iron Steel pointed 24 lbs... | 1 | 4 | 1 |
| 4784 | Crow Iron, Common, 1st Size 25 lbs. ... ... ... | 2 | 15 | 7 |
| 4785 | do. „ „ 2nd „ 12 lbs... | 1 | 6 | 10 |
| 4786 | do. „ Miner's Europe 19½ lbs. | 1 | 15 | 9⅓ |
| 4787 | do. „ Common, large weighing 22½lbs. Europe, ... | 2 | 9 | 10½ |
| 4788 | do. „ „ Medium „ 16 lbs. | 1 | 13 | 6 |
| 4789 | do. „ „ Small „ 12 lbs. | 1 | 8 | 5½ |
| 4790 | Hammer hand, Europe Pattern 3½ lbs. ... ... ... | 0 | 14 | 0 |
| 4791 | do. „ „ „ 2½ lbs. ... | 0 | 13 | 1 |
| 4792 | do. sledge „ „ 14 lbs. ... | 2 | 9 | 2 |
| 4793 | do. for breaking stones large 13 lbs. ... ... ... | 1 | 13 | 11 |
| 4794 | do. „ „ „ small 3 lbs.... | 0 | 9 | 1 |
| 4795 | do. „ „ „ „ 2 lbs.... | 0 | 6 | 6½ |
| 4796 | do. Rivetting Europe Pattern 12 oz.... .. ... | 0 | 4 | 10 |
| 4797 | do. sledge Country 14 lbs ... | 1 | 15 | 11 |
| 4798 | Hook Bill Europe Pattern, | 1 | 7 | 5 |
| 4799 | Jumper Iron 1st size 34 lbs. ... | 5 | 0 | 10½ |
| 4800 | do. „ 2nd „ 23½ „ ... | 3 | 10 | 10 |
| 4801 | do. „ 3rd „ 21 „ ... | 2 | 13 | 7⅓ |
| 4802 | Mamoty Country 10 lbs. ... | 1 | 15 | 5 |
| 4803 | Mamoty do. 5 lbs. ... | 1 | 3 | 10 |
| 4804 | Mamoty Wudder's, ... .. | 0 | 10 | 8 |
| 4805 | Mamoty Country, Col. Ottley's pattern. ... ... ... | 1 | 6 | 5 |
| 4806 | Needle, Priming, Copper, large 3 feet 5 Inches, .. ... | 1 | 10 | 8 |
| | *Carpenter's Tools.* | | | |
| 4807 | Awl Brad with handles, ... | 0 | 5 | 3 |
| 4808 | Compasses, Iron, Carpenter's Cooper's and Millwright's with sweep 12 inch.... ... | 1 | 7 | 1 |
| 4809 | Do. do. do 6 „ ... | 0 | 13 | 4 |
| 4810 | Driver Screw Carpenter's,... | 0 | 13 | 2 |
| 4811 | Gauge Carpenter Common Europe, | 0 | 6 | 8 |
| 4812 | do. Mortice Carpenter's do. | 1 | 7 | 11 |
| 4813 | Hammer Claw Europe with handles, .. ... ... ... | 1 | 14 | 9½ |
| 4814 | Do. with Turnscrews,... | 2 | 1 | 0 |
| 4815 | Plane Jack (without Irons), ... | 0 | 14 | 10 |
| 4816 | Do. Smoothing ( do do ) | 0 | 11 | 4 |
| 4817 | Do. Rabetting 1¼ inch (do do) | 0 | 10 | 2 |
| 4818 | Do. do 1 do (do do) | 0 | 9 | 11 |
| 4819 | Do. Trying (without Iron) | 1 | 2 | 3 |
| 4820 | Letter steel for Saws Hand, ... | 0 | 11 | 6 |
| | *Cooper's Tools.* | | | |
| 4821 | Adze, Brass ... ... ... | 4 | 3 | 3 |
| 4822 | Do. Iron do Europe,... | 1 | 11 | 8 |
| 4823 | Crow do. with stock large,.... | 3 | 3 | 7 |
| 4824 | Do. do do do Medium, | 2 | 4 | 5 |
| 4825 | Do. do do do do Small ... | 1 | 13 | 8 |
| 4826 | Driver Brass ... ... | 3 | 3 | 7 |
| 4827 | Driver, Iron ... ... ... | 0 | 7 | 7 |
| 4828 | Hammer, Brass ... ... | 2 | 6 | 11 |
| 4829 | Howel... ... ... ... | 0 | 14 | 3 |
| 4830 | Jointer without Iron, ... | 2 | 4 | 2 |
| 4831 | Vice Iron ... ... ... | 0 | 2 | 4 |
| 4832 | do Brass ... ... | 0 | 6 | 4 |
| | *Armourer's Tools.* | | | |
| 4833 | Brace, Armourer's and Gun Makers without bits,... ... | 2 | 1 | 6 |
| 4834 | Hammer Rivetting Europe 2 lbs. | 0 | 7 | 6½ |
| 4835 | Do. do do ½ „ | 0 | 1 | 8 |
| 4836 | Pincers Iron Common, ... | 1 | 0 | 11 |
| 4837 | Do. do Cutting, ... ... | 1 | 1 | 2 |
| 4838 | Plyers Common, ... ... | 0 | 15 | 6½ |
| 4839 | Do. Cutting or Gun Makers, | 1 | 6 | 9 |
| 4840 | Vice hand, Iron, Europe, ... | 1 | 12 | 7 |
| | *Smith's Tools.* | | | |
| 4841 | Chissel cold, ... ... ... | 0 | 15 | 0 |
| 4842 | Do. Rod, ... ... | 0 | 7 | 6 |
| 4843 | Compasses, Iron, Callipers Smiths with sweep 8 inch, ... ... | 1 | 9 | 10 |
| 4844 | Drills for Smiths 1½ inch,... | 0 | 8 | 2 |
| 4845 | Do. „ „ 1⅛ „ ... | 0 | 7 | 10 |
| 4846 | Do. „ „ 1 „ ... | 0 | 7 | 6 |
| 4847 | Do. „ „ ⅞ „ ... | 0 | 6 | 10 |
| 4848 | Do. „ „ ¾ „ ... | 0 | 6 | 6 |
| 4849 | Do. „ „ ⅝ „ ... | 0 | 6 | 2 |
| 4850 | Do. „ „ ½ „ ... | 0 | 5 | 6 |
| 4851 | Do. „ „ ⅜ „ ... | 0 | 5 | 2 |
| 4852 | Do. „ „ ¼ „ ... | 0 | 4 | 10 |
| 4853 | Hammer hand Europe 6 lbs. ... | 1 | 1 | 8 |
| 4854 | Do. do do 4 lbs. | 0 | 12 | 6 |
| 4855 | Do. do do 3 lbs. ... | 0 | 11 | 5 |
| 4856 | Do. do do 2¼ lbs. | 0 | 9 | 2 |
| 4857 | Do. Setting Smiths,... ... | 0 | 9 | 8 |
| 4858 | Do. Sledge 14 lbs. .. | 2 | 7 | 4 |
| 4859 | Do. do 12 lbs. .. | 2 | 2 | 11 |
| 4860 | Do. do 9 lbs. ... | 1 | 10 | 0 |
| 4861 | Do. Wrench,... ... ... | 5 | 14 | 11 |
| 4862 | Tongs, ... ... ... | 0 | 13 | 9 |
| 4863 | Wrench, Iron, for Nut Screw, ... | 1 | 14 | 6 |
| | *Engraver's Tools.* | | | |
| 4864 | Engravers for brass (10 per set,) | 1 | 7 | 3 |
| 4865 | Do Iron (10 per set,) ... | 1 | 2 | 2 |
| | *Turner's Tools.* | | | |
| 4866 | Gravers, Turner's, ... ... | 0 | 10 | 1 |
| | *Mason's Tools.* | | | |
| 4867 | Hammers Iron, Stone Cutter's Axe Faced 15 lbs. ... ... ... | 2 | 15 | 6 |
| | *Sawyer's Tools.* | | | |
| 4868 | Setters Steel for Saws pit, ... | 0 | 13 | 6 |

*Miner's Tools One Set Complete No.* 1.

| | *No. in a set.* | *ft.* | *in.* | R. | A. | P. |
|---|---|---|---|---|---|---|
| 4869 | 1 Bar Tamping Brass, ... | 2 | 1 | 3 | 12 | 2 |
| 4870 | 2 Bars Pincing, ... ... ... | 4 | 7 | 3 | 6 | 10 |
| 4871 | 2 Bits Troy, ..... | 1 | 7 | 2 | 4 | 1 |
| 4872 | 2 Borers with Steel points, | 1 | 0 | 1 | 0 | 7 |
| 4873 | 2 Do. do ... | 1 | 6 | 1 | 3 | 10 |

| | | | R. | A. | P. |
|---|---|---|---|---|---|
| 4874 | 2 | Borers with Steel points, 2 0 | 1 | 7 | 4 |
| 4875 | 2 | Do. do ... 3 0 | 1 | 14 | 0 |
| 4876 | 2 | Do. do ... 4 0 | 2 | 5 | 0 |
| 4877 | 1 | Drag with worm, .... 3 0 | 0 | 3 | 6 |
| 4878 | 6 | Gads Steel 1st Size,..... | 4 | 2 | 0 |
| 4879 | 6 | Do. 2d „ ..... | 3 | 1 | 6 |
| 4880 | 6 | Do. 3d „ ..... | 1 | 15 | 6 |
| 8481 | 2 | Hammers Hand Miner's Boarding, ... ... ... | 1 | 13 | 3 |
| 4882 | 2 | Do. „ Loading, .... | 1 | 3 | 8 |
| 4883 | 1 | Do. Sledge, ... ... ... | 3 | 1 | 10 |
| 4884 | 4 | Jumpers Iron, „ ... 5 9 | 12 | 9 | 8 |
| 4885 | 4 | Poles Pick, „ ... 1 3 | 4 | 15 | 7 |
| 4886 | 1 | Scoop Spoon Iron, ..... 1 5 | 0 | 4 | 1 |
| 4887 | 2 | Shovels Iron Mining, ..... | 1 | 15 | 6 |
| 4888 | 2 | Tompions Iron (Flat at both ends) 3 feet, ... ..... | 1 | 12 | 10 |
| 4889 | 2 | Wedges Melding Iron large 13 Inches, ..... | 2 | 12 | 8 |
| 4890 | 2 | Do. „ „ small 11 In. | 2 | 3 | 8 |
| 4891 | 1 | Wire Priming Copper 3 ft. 2 „ | 1 | 4 | 9 |
| 4892 | 2 | Mallets, Wooden ..... | 0 | 12 | 3 |
| | | | 61 | 10 | 1 |

*Country Tools.*

| | | | | | |
|---|---|---|---|---|---|
| 4893 | | Adze, Iron, Carpenter's, ... ... | 1 | 1 | 0 |
| 4894 | | Bits, Drill, ... ... ... ... | 0 | 5 | 9 |
| 4895 | | Chissel, Country, Carpenter's, 1 Inch, ... ... ... ... ... | 0 | 8 | 2 |
| 4896 | | Do. do. do. ¾ do..... | 0 | 6 | 7½ |
| 4897 | | Do. do. Mortice. ½ do..... | 0 | 5 | 7 |
| 4898 | | Do. do. do. ⅜ do..... | 0 | 6 | 2 |
| 4899 | | Do. of Sizes, .. ... ... ... | 0 | 11 | 3 |
| 4900 | | Compasses, Iron, Carpenter's, ... | 0 | 12 | 2 |
| 4901 | | Drill Bow,... ... ... ... ... | 0 | 3 | 5 |
| 4902 | | Drill with socket, ... ... ... | 0 | 3 | 0 |
| 4903 | | Drivers Screw, ... ... ... ... | 0 | 3 | 7 |
| 4904 | | Gauge, Carpenter's Common,... | 0 | 1 | 5 |
| 4905 | | Hammer hand with handle... ... | 0 | 6 | 10 |
| 4906 | | Mallet, wooden ... ... ... | 0 | 3 | 0 |
| 4907 | | Plane Rabetting ½ inch, ... ... | 0 | 6 | 2 |
| 4908 | | Do. do. ¼ do.,... ... | 0 | 6 | 2 |
| 4909 | | Do. do. 1 do., ... ... | 0 | 6 | 8 |
| 4910 | | Do. Hollowing,... ... ... | 0 | 6 | 2 |
| 4911 | | Do. Iron, Carpenter's, ... ... | 1 | 13 | 9 |
| 4912 | | Rule wooden, Carpenter's, 3 feet | 0 | 2 | 10 |
| 4913 | | Saw hand, ... ... ... ... ... | 1 | 5 | 0 |
| 4914 | | Do. Tenon ... ... ... ... | 1 | 1 | 8 |
| 4915 | | Square Carpenter's wooden large... | 0 | 3 | 8 |
| 4916 | | Do. do. do. small | 0 | 2 | 1 |
| 4917 | | Sharpening Block, | 0 | 2 | 10 |

*Miscellaneous Articles.*

| | | | | | |
|---|---|---|---|---|---|
| 4918 | | Block Gin Iron with brass sheaves treble. ... ... ... ... | 36 | 4 | 8 |
| 4919 | | Do. do do double.. | 28 | 5 | 4 |
| 4920 | | Do. purchase wooden single with friction Rollers 6 Inch,... | 1 | 9 | 0 |
| 4921 | | Do. „ „ double „ 6 „ ... | 2 | 15 | 0 |
| 4922 | | Do. „ „ double „ 7 „ ... | 3 | 5 | 3 |
| 4923 | | Do. „ „ single „ 7 „ ... | 1 | 12 | 6 |
| 4924 | | Block Gin Iron purchase wooden double with friction Rollers 8 Inch, | 3 | 10 | 7 |
| 4925 | | Do. „ „ single „ 8 „ ... | 1 | 14 | 4 |
| 4926 | | Do. „ „ double „ 9 „ ... | 4 | 2 | 3 |
| 4927 | | Do. „ „ single „ 9 „ ... | 2 | 4 | 1 |
| 4928 | | Do. „ „ single with brass sheaves 5 inch, ... | 1 | 8 | 10 |
| 4929 | | Do. „ „ double „ 5 „ ... | 2 | 15 | 0 |
| 4930 | | Case for Quadrant Spirit Gun, | 1 | 15 | 1 |
| 4931 | | Drifts Fuze 13, 10 & 8 inch. 2 in a set (one set)..... ..... | 1 | 2 | 2 |
| 4932 | | Do. „ 13, 10 & 8 „ 3 „ „ (one set) ..... | 1 | 9 | 3 |
| 4933 | | Do. „ 4⅗, „ 2 „ „ (one set) ..... | 1 | 5 | 8 |
| 4934 | | Do. „ 5½, „ 3 „ „ (one set) ..... | 2 | 1 | 10 |
| 4935 | | Fracture Cradle,..... | 8 | 12 | 8 |
| 4936 | | Figures for marking Horses, 9 in a set, ... ... ... ... | 7 | 15 | 0 |
| 4937 | | Gauges, Iron, for shot H. and L. 6 Pr. (2 in a set)..... ..... | 2 | 9 | 6 |
| 4938 | | Gauges, Iron, for shot H. and L. 9 Pdr. (2 in a set),.. ..... | 2 | 11 | 11 |
| 4939 | | Do. do. do. Shells H. and L. 4⅘ inch (2 in a set),..... | 3 | 2 | 10 |
| 4940 | | Do. do. do. H. and L. 5½ inch (2 in a set), ..... | 3 | 3 | 4 |
| 4641 | | Hand Cuffs, Spring lock, Country, Pair, ... ... ... ... | 2 | 14 | 4 |
| 4942 | | Do. do. Europe ..... „ ... | 2 | 10 | 4 |
| 4043 | | Iron priming small, ..... | 0 | 7 | 0 |
| 4944 | | Do. do. large,..... | 0 | 8 | 7 |
| 4945 | | Do. Suspension wheel with brass nave.... ... ... ... 105 | 10 | 7 | |
| 4946 | | Liston's double inclined Plane, ... | 6 | 0 | 0 |
| 4947 | | Padlocks, Iron, single 2¼ inch.... | 1 | 14 | 9 |
| 4948 | | Do. „ „ „ 3 „ ... | 1 | 15 | 1 |
| 4949 | | Do. „ „ double 2½ „ ... | 2 | 6 | 10 |
| 4950 | | Do. „ brass single 3½ „ ... | 8 | 13 | 0 |
| 4951 | | Do. „ do. double 3¾ „ ... | 4 | 15 | 5 |
| 4952 | | Do. drawer with key, ..... | 1 | 14 | 10 |
| 4953 | | Do. Door Brass 8 inch,..... | 9 | 3 | 10 |
| 4954 | | Do. do do 10 do,..... | 12 | 7 | 6 |
| 4955 | | Do. Almirah, brass,..... | 1 | 8 | 1 |
| 4956 | | Letter for marking horses,..... | 0 | 13 | 8 |
| 4957 | | Pincers Fuze Brass.....Pair. | 2 | 6 | 2 |
| 4958 | | Palms hand Steel,..... ..... | 0 | 4 | 8 |
| 4959 | | Spikes Gun Merline small,..... | 0 | 2 | 1 |
| 4960 | | Do. „ „ large,..... | 0 | 12 | 9 |
| 4961 | | Do. „ Sping,..... | 0 | 4 | 8 |
| 4962 | | Do. „ Round,..... | 0 | 1 | 8 |
| 4963 | | Do. „ Ragged,..... | 0 | 1 | 8 |
| 4964 | | Spade, English,..... ..... | 2 | 2 | 3 |
| 4965 | | Wrench, Iron for Sights,..... | 0 | 7 | 3 |

SUB CONDUCTOR T. W. SKINNER, EXHIBITOR.

| | | | | | |
|---|---|---|---|---|---|
| 4966 | | Five dials on one pedestal, ... Rs. | 6 | 10 | 0 |
| 4967 | | Philosophical Balance, .. ..... | 42 | 11 | 8 |
| 4968 | | 1 set Geometrical solids for sale, | 30 | 0 | 0 |

*(The above made at the Gun Carriage Manufactory.)*

SERJEANT J. HAYES, EXHIBITOR.

| | | R. | A. | P. |
|---|---|---|---|---|
| 4969 | Improved Racket Brace, ..... Rs. | 8 | 15 | 0 |
| 4970 | Padlock, Pistol Flint, ..... | 2 | 13 | 10 |
| 4971 | Micrometer shell Gauge 10 inch, | 5 | 8 | 6 |
| 4972 | Do. do. 8 inch, ... | 4 | 11 | 5 |
| 4973 | Model of oil press, horizontal double screw ½d size, ..... (Price of the full size, Rs. 278-12-6) | 22 | 2 | 4 |
| 4974 | Padlock with tumblers, ..... | 1 | 14 | 4 |
| 4975 | Pistol revolver on Colt's principle, | 19 | 3 | 2 |
| 4976 | Screw key new pattern to take 4 sizes, viz. ¾, 1, 1¼ and 1½ inch-nuts, | 2 | 2 | 6 |
| 4977 | Garden Shears, ..... | 2 | 8 | 6 |

*(The above made at the Gun Carriage Manufactory.)*

SUB OVERSEER DAVOOD, EXHIBITOR.

4978 Iron Cheek of a ten inch Howitzer Carriage, ..... Rs. 375 15 6
*(Made at the Gun Carriage Manufactory.)*

FOREMAN W. REYNOLDS, EXHIBITOR.

4979 25 Fire Bricks made of hard clay Rs. 0 9 8
4980 25 Do. do. do. soft do. ... 0 7 5
*(Made at the Gun Carriage Manufactory.)*

FOREMAN B. ROBINSON, EXHIBITOR.

4981 6 Hinges (brass) cast entire with the joints without fitting or filing, Rs. 8 10 5
*(Made at the Gun Carriage Manufactory.)*

SERJEANT W. CHALK, EXHIBITOR.

4982 Box Lock with key (*made at the Gun Carriage Manufactory.*)
This lock is constructed on a peculiar principle of perfect safety, and it is sent to the Exhibition with the view to test the same by challenging any one to pick it.—The key is in the possession of the Local Committee and will be handed by them to the Jurors.

P. RAYAPPA PILLAY, NAZARETH, EXHIBITOR.

| | | | | |
|---|---|---|---|---|
| 4983 | 1 Phial Oma Oil, ..... Rs. | 1 | 0 | 0 |
| 4984 | 1 Pint Native Ink, ..... ,, | 0 | 2 | 0 |
| 4985 | Fibres and leaves of Palmirah, ,, | 0 | 1 | 0 |
| 4986 | Palmirah root flour (1 packet)... ,, | 0 | 4 | 0 |

ASSISTANT SURGEON J. M. MACLAGAN, M. D. BENGAL ESTAB: EXHIBITOR.

4987 1 set Ivory Chessmen.
4988 1 set Ivory figures.

J. T. MACLAGAN, ESQ. EXHIBITOR.

*Photograph Protraits by Tunny of Edinburgh.*

4989 David Maclagan, M. D., Physician to the Forces, Surgeon to the Queen &c.
4990 Mrs. Maclagan.
4991 John Parker, Esq., Principal Extractor of records in the Courts of Council and Session of Scotland.
4992 Seven smaller likenesses.
4993 Piece of Gibraltar Rock, cut and polished.

GHOOLAM KADR, EXHIBITOR.

| | | R | A. | P. |
|---|---|---|---|---|
| 4994 | Model of a ship full rigged,.. Rs. | 35 | 0 | 0 |
| 4995 | Model of a cutter do. do.,..... ,, | 14 | 0 | 0 |

T. CHOCALINGUM, EXHIBITOR.

| | | | | |
|---|---|---|---|---|
| 4996 | 6 Silver Spoons, ..... Rs. | 100 | 0 | 0 |
| 4997 | 1 Gold Jadapillay, ..... ,, | 70 | 0 | 0 |

W. E. COCHRANE, ESQ., EXHIBITOR.

4998 Enamel Portrait of His Majesty George III.
4999 Enamel Portrait of Her Majesty Queen Charlotte.
The above were presented by George III to H. H. the Nabob of the Carnatic.

STEPHEN LAZAR, ESQ., EXHIBITOR.

5000 1 Case of Indigo.

C. YACAMBARUM IYER, EXHIBITOR.

5001 6 Bottles Berar Hair Oil, Rs. 1-2 per bottle.

MR. A. T. JAFFREY, EXHIBITOR.

5002 *Herbarium of Indian Vegetables* (98) *Rs.* 30.

Abelmoschus esculentus.
Achryanthes aspera.
Æschynomene aspera.
Agati grandiflora.
Alternanthera sessilis.
Amaranthus tenuifolius.
Do. spinosus.
Do. campestris.
Do. tristis.
Do. polygamus
Do. oleraceus.
Do. atropurpureus.
Amorpophalus campanulatus
Andropogon esculentum.
Aerua lanata.
Artocarpus integrifolius.
Asystasia Coromandeliana.
Atriplex heteranthera.
Batatas edulis.
Bauhinia albida.
Do. purpurea.
Bergera Kœnigii.
Böerhavia procumbens.
Bryonia coccinia.
Byttneria herbacea.
Caladium esculentum.
Capsella bursa-pastoris.
Capsicum frutescens.
Do. minimum.
Capparis brevispina.
Caralluma adscendens.
Carica papaya.
Cleome pentaphylla.
Do. viscosa.
Cocos nucifera.
Commelina communis.
Coriandrum sativum.
Cucurbita maxima.
Do. citrullus.
Do. ovifera.
Cucumus usitata.
Cyamopsis psoraloides.
Cynodon dactylon.
Dillenia speciosa.
Desmanthus natans,
Dioscorea purpurea.
Do. aculeata.
Dolichos ensiformis.
Erythroxylon areolatum.
Euphorbia pilulifera.
Emblica Officinalis.
Ficus racemosus.
Foeniculum vulgare.
Gisekia pharnaceoides.
Glinus trianthemoides.
Hibiscus sabdariffa.
Do. surattensis.
Hoya viridiflora.
Ipomœa separia.
Do. reptans.
Do. reniformis.
Lablab vulgaris.
Lagenaria vulgaris.
Do. pipo.
Leucas aspera.
Mangifera Indica.
Momordica charantia, var. mu-ricata.
Momordica charantia.
Morinda umbellata.
Moringa pterygospermum.
Musa sapientum.
Nelumbium speciosum.
Ocymum villosum.
Oxalis corniculatus.
Pisonia morindifolia.
Portulacca oleracea.
Portulacca quadrifida.
Premna integrifolia.
Do. serratifolia.
Psophocarpus tetragonolobus.
Rivea fragrans.
Rothia trifoliata.
Rumex vesicaria.
Solanum incertum.
Do. melongena,
Do. Lycopersicum.
Sonchus oleraceus.
Spinacia oleracea.
Spondias mangifera.
Stellaria media.
Sueda Indica.
Tamarindus Indica.
Trianthema obcordata.
Tribulus terrestris.
Trichosanthes anguina.
Vitis quadrangularis.
Webera tetrandra.
Zizyphus jujuba.

5003 *Indian Fibres.*

Abelmoschus tetraphyllus.
Do. ficulneus.
Eleaendron anfructuosum.
Crotolaria juncea.
Abutilon tomentosa.
Do. Indica.
Do. sp.
Cordia obliqua.
Thespesia populneus.
Althea rosea.
Borassus flabelliformis.
Pandanus mosghatus.
Agave Americana.
Yucca gloriosa.
Asclepias (syn. Calatropis) gigantea.
Sida Mysorensis.
Furcraea gigantea.
Hibiscus rosa sinensis.
Do. sp.
Do. lampas.
Hibiscus Suratensis.
Guazuma tomentosa.
Helicteres Isora.
Sida acuta.
pathodea adenophylla.
Eriolœna Candollea.
Gmelina arborea.
Turnera trioniflora.
Cocos nucifer.
Musa sapicutum.
Sansiveria Zeylanica.
Agave Americana minima.
Do. do. variegata.
Banhinia Richardiana.
Do. purpurea.
Do. diphylla.
Do. tomentosa.
Anona reticulata.
Ficus religosa.
Uvaria longifolia.a
Adansonia digitat .
Sterculia alata
Yucca aloifolia.
Ananassa sativa.
Vernonia anthlementica.
Thevitia nerifolia.
Morus Indica.
Tecoma capensis.
Hoya viridiflora.
Hamelia pateus.

Total 50.

*Dye Wood.*

5004 3 pieces and chips of Fustick (Maclura Tinctoria.)

THE MADRAS SCHOOL OF INDUSTRIAL ARTS, EXHIBITORS.

5005 *Samples of Pottery.*

Jars
Square Jars
Cylinders for Galvanic batteries
Funnels
Beakers
Sandbaths
Filter stands
Evaporating dishes
Covered boxes
Cells
Crucibles
Jars for Chemicals
Chatties, plain and glazed
Milk pans
Bowls
Plates
Cups and Saucers
Dishes
Butter Pots
Butter Coolers
Goglets
Flower pots

5006 Four Screens covered with Lithographs.

*Models.*

5007 Brake for cleaning fibres.
5008 Wheel for raising water (in brass.) (MADE BY R. KENNEDY, ESQ.)
5009 Wheel for raising water (in wood.)
5010 Copperplate printing press.
5011 Stone Cutter's hammer and chissels.
5012 Gutta Percha, sent by Captain R. Roberts.
5013 Iron Ores, „ Lieut. C.E.Bates, 16th N.I.
5014 Dodonea Viscosa Portia & other wood } T.B. Roupell, Esq.
5015 Coal from Labuan
5016 Coal from Nellore Dist. Colonel Faber.
5017 2 Baskets of Pottery from Raichore } Dr. G. S. Smith.
5018 1 Box Galina or Lead ore from Kurnool } Captain Russell.

LT. COL. MCCALLY, EXHIBITOR.

*Models.*

5019 Two Buffing Mills. Rs. 11 8 & 1 8 0
5020 One Tanning Mill. „ 20 0 0
5021 One Rice Mill. Rs, 12 0 0
5022 One Barley Mill. 7 0 0
5023 One Bark Mill. 2 8 0
5024 Two Wheat Mills. 3 8 & 1 8 0
5025 One Battering Ram. 1 8 0
5026 One Chinese pump. 12 0 0

R. KENNEDY, ESQ., ASST. CIVIL ENGINEER, EXHIBITOR.

5027 One Chunam Vase, native workmanship.
5028 One bottle containing a gilt temple with figure of Rajah seated in Chair of State—native workmanship.
5029 Machine suitable for driving punkahs, with water for motive power, and direct reciprocating action.

*Models.*

5030 Bridge across the Canal on Guindy Road.
5031 Lattice Timber Bridge across ditto, about 1½ miles south of Guindy Road.
5032 Intended foot bridge.

All these bridges are 60 feet span, the models are roughly made as guides to the workmen.

R. BURGASS, ESQ., EXHIBITOR.

5033 2 Mameluke Swords with Damascus blade and silver scabbards.
5034 1 Burmese Sword with silver scabbard.
5035 1 Do. do. „ brass „
5036 1 Couteau de chasse with „
5037 1 Chain coat of Mail, Affghan.
5038 1 Head & face do. do.
5039 4 Daggers with sheaths.
5040 1 Stand with 30 swords.
5041 1 Turkish Axe.
5042 1 Caffre knob keerie Rhinoceros horn.
5043 1 Short Bayonet.
5044 1 Dagger.
5045 2 Caffre Assegays.
5046 3 Samblre Antlers, large.
5047 1 Pair Buffaloe horns.
5048 1 Saw of Sword Fish.
5049 1 Pair of Gems bok horns.
5050 1 Model of boat with sliding keel.
5051 2 Japanese Candelabra.

THE MADRAS SCHOOL OF INDUSTRIAL ARTS, EXHIBITORS.

5052 Fossils from Sedrapett, sent by A. Hall, Esq.
5053 17 large Photographs, do. Lieut. Col. C. A. Denison.
5054 22 small do. do. do.
5055 Fossils of the Gypsum Series from Ennore.
5056 Set of 10 Lithographs of heads in imitation of chalk drawings.
5057 Set of 8 sporting coloured prints after Hering.
5058 Machine for cleaning fibres.
5059 Machine for making ropes.

PAULAVANY RUNGIAH NAIDOO, EXHIBITOR.

5060 *Bead work.*
1 Cct with curtains.
2 Sofas.

2 Chairs.
2 Boxes.
1 Box in 3 parts.
1 Chocataloo with glass beads and 2 dice.
1 Doonthee.
2 Boxes Goomatum.

5061 Condapillay balanced on a pole.
5062 16 Lace Bangles.
5063 *Drugs used by Mussulman Doctors.*

| | |
|---|---|
| Sattravuthoo. | Thookmaprachoo. |
| Panosh. | Soolathava. |
| Voochkathooch. | Muroo seeds. |
| Soopa-soosh. | Suchnuntha. |
| Anoosun. | Motharooth. |
| Apapulsan. | Puthoorcepath. |
| Cashur seeds. | Cacunchoo. |
| Red Oomash. | Nunnaree roots. |
| Oodrengan. | Sinniaconthoo. |
| Cathera. | Picha. |
| Vissvunthoo. | Casoosh. |
| Paupoona. | Sooroonsah. |
| Acceeloomoolk. | Malooccalee. |
| Appa Aul. | Sumaccoo. |
| Patharcheepoa. | Sash root. |
| Theothrashoopath. | Vash thoorgie. |
| Shathuthoo. | Pamanasookoo. |
| Caroopuchoo seeds. | Caroopoovoowash. |
| Appoolachoo. | Mookalaarashok. |
| Pamunsoopath. | Voongoorthoo. |
| Paroothungoo. | Salookosha. |
| Moollangee seeds. | Cacooshooshur. |
| Thoothasheorukkoo. | |

THE HON. WALTER ELLIOT, ESQ., EXHIBITOR.

5064 Case of old pottery.
5065 Case of *Crania.*
5066 4 pieces of carved marbles.
5067 1 box of copper sasunums.

These copper grants are curious for their antiquity and are of great value from the unique historical facts they contain.

5068 Bronze statuette of Mercury.

MESSRS. ASHTON, RICHARDSON & Co., EXHIBITORS.

5069 12 bags of Coffee grown on Shevaroy Hills, Salem.
5070 3 bags. Wheat. do. do. do.

Mr. G. PLEBST, EXHIBITOR.

5071 Corund Polisher made at the German Mission Press, Mangalore.

Mr. P. ANTHONEY, EXHIBITOR.

5072 Pair of artificial flowers in pith, colored, on flower pot stand.

GHOOLAM MAHOMED, EXHIBITOR.

5073 5 Specimens of varnishing on Maple wood.

EDWARD BALFOUR, ESQ., EXHIBITOR.

5074 4 Straw hats, 12 as. 6 as. 6 as. and 4 as.
5075 50 yards plaited straw made from Palmyra leaf of which hats are made, 12 as.

J. ROLDE, ESQ., EXHIBITOR.

5076 One grain bruiser.

H. W. PORTEOUS, ESQ., EXHIBITOR.

5077 4 Portraits on pastiles by M. Scot.; Bolonge.
5078 Portrait in oils by Sir Joshua Reynolds.

Mr. B. DAVIES, EXHIBITOR.

5079 7 Teak Blocks of sizes Rs. 0 4 0 per inch
5080 2 Specimens of Water proof cloth,..... 2 0 0 per yard
5081 3 „ Table covering 2 14 0 „ „
5082 Velvet cap worked in gold in glass case.
5083 Shark's jaw in glass case.

MESSRS. BINNY & Co., EXHIBITORS.

5084 2 Samples Coffee from Santawerry, Nuggur District of Mysore.

VEERASAWMY, HAVILDAR, F. Co. 12TH N. I., EXHIBITOR.

5085 Brass Tray in two parts used for Beetle nuts at festivals Rs. 10

T. SAWMY CHITTY, EXHIBITOR.

5086 Set of Geometrical Figures,

THE HON. SIR C. RAWLINSON, EXHIBITOR.

5087 Lotus Flower stand of native workmanship.

MESSRS. WALKER & Co., EXHIBITORS.

5088 17 Specimens of Indigo.

MAJOR J. G. BALMAIN, EXHIBITOR.

5089 Specimen of cotton weighing 75 tolas.
5090 Black Cumblie made by Hunmoona Koorbur of Goodlanoar Talook, Coonoor; 15ft. long by 5¾ wide.....Rs. 20

THE ARSENAL FORT ST. GEORGE, EXHIBITORS.

5374 Adze, Brass, Cooper's.
5375 „ Iron, Carpenter's Europe Iron and Steel.
5376 „ „ „ Country „ „
5377 „ „ „ Europe Steel entirely.
5378 „ „ Cooper's „ Iron and Steel.
5379 „ „ „ Country „ „
5380 „ „ „ English Steel entirely.
5381 Axe, Broad.
5382 „ Felling.
5283 „ Hand 4½.
5384 „ „ 2¾.
5385 „ „ 2½.
5386 „ Felling, American Pattern.
5387 Auger, Iron, Carpenter's 1¼ Ins.
5388 „ „ „ 1 „
5389 „ „ „ ⅞ „
5390 „ „ „ ¾ „
5391 „ „ „ ⅝ „
5392 „ „ „ ½ „
5393 Awl Brad, Europe Iron and Steel (4)
5394 „ „ Country „ „ (4)
5895 „ „ English Steel. (4)
5396 „ „ Country „ (4)
5397 Brace, Smith's with 3 Bits.
5398 Chissel, Carpenter's Socket 1¼ Ins.
5399 „ „ „ 1¼ „
5400 „ „ „ 1¼ „
5401 „ „ „ 1 „
5402 „ „ „ ¾ „
5403 „ „ „ ⅝ „
5404 „ „ „ ½ „
5405 „ „ „ ¼ „
5406 „ Cold (3)

5407 Driver, Brass, Cooper's.
5408 „ Iron „
5409 Ghurry Metal.
5410 Hammer Claw (2)
5411 „ for Breaking Stones Large 13lbs.
5412 „ „ „ „ Small 3 „
5413 „ „ „ „ „ 2 „
5414 Hammer Hand 6 lbs.
5415 „ „ 4 „
5416 „ „ 2½ „
5417 „ „ 2 „
5418 „ Rivetting 1 „
5419 „ „ 12oz.
5420 „ Iron Stone Cutters Axé Faced 15lbs.
5421 „ Braziers of Sorts (one set of 24.)
5423 „ Sledge Country Pattern 19lbs.
5423 „ „ „ „ 14 „
5424 „ „ English „ 14 „
5425 „ „ „ „ 12 „
5426 „ „ „ „ 9 „
5427 Hook Bill, Davy Jones' Pattern.
5428 Jointer Cooper's with Iron
5429 Plane Jack.
5430 „ Smoothing.
5431 „ Trying.
5432 Plough for Cutting Straps of Leather.
5433 Scale Copper with Beam 4lbs.
5434 „ „ „ „ 1 „
5435 „ Brass with Beam Stand and 10 Brass weights to weigh Letters.
5436 Stamp of Letters 26 per Set.
5437 „ „ Figures 9 „ „
5438 „ with Device for Stamping weights and Measures (2)
5439 Vice, Iron Hand (Bangalore.)
5440 „ „ „ (Vellore.)
5441 „ „ Cooper's Lever.
5442 Weight, Brass 56lbs.
5443 „ „ 28 „
5444 „ „ 14 „
5445 „ „ 7 „
5446 „ „ 4 „
5447 „ „ 2 „
5448 „ „ 1 „
5449 Set of weights (10) viz. 4lbs. 2lbs. 1lb. 8oz. 4oz. 2oz. 1oz. ½oz. ¼oz. ⅛oz.
5450 Weight, Brass Indian Maunds Standard one of 3,200 Rupees.
5451 Weight, Brass Indian ½ Maund standard one of Rs. 1600
5452 „ „ „ ¼ „ „ one of Rs. 800
5453 „ of 2½ Maunds or one cand.
5454 „ „ 1 Maund
5455 „ „ ½ „
5456 „ „ ¼ „
5457 „ „ 1 Viss
5458 „ „ ½ „
5459 „ Brass ¼ „
5460 Set of weights (7) viz. Polloms 5. 3. 2. 1. ½. ¼. ⅛.
5461 „ „ (3) viz. Tola 1. ½. ¼.
5462 Shuttle cotton.
5463 Cotton Gin, Europe.
5464 „ „ Country.
5465 Pistol Revolver, Colt's.
5466 Musket Rifle Percussion with Bayt. Bore 5·77 of 1853.
5467 Shot Heating Machine complete.
5468 „ Round Iron Loose 32 Pdr.
5469 „ „ „ „ 32 „
5470 Cramp spring for Locks, Percussion.
5471 Fife B.
5472 „ C.
5473 Horn Bugle, Common.
5474 „ „ Light Infantry
5475 Nipple wrench, new Pattern
5476 Trumpet Cavalry Musical
5477 Tache Sabre
5478 Pouch ammunition
5479 Axe, Pick, Country, 10 lbs.
5480 „ „ „ 5 „
5481 „ Cutting Laterite stone
5482 Iron Country Beypore Flat 2⅜ Ins. lbs. 21
5483 „ „ „ Bolt 1⅜ „ „ 40
5484 „ „ „ Square 1⅜ „ „ 33
5485 „ „ Palnad. „ 10 5/16
5486 „ „ Cuddapah „ 6½
5487 Steel, Country Vellore (6 pieces.) „ 2 1/16
5488 Axe, Paring Laterite stone.
5489 Borer, Miner's 4 feet.
5490 „ „ 3 „
5491 „ „ 2 „
5492 „ „ 1½ „
5493 „ „ 1 „
5494 Bar Pinching Miner's.
5495 Bit Tray, „
5496 Bar Tamping Brass Miner's.
5497 Clipper, Rose Large.
5498 „ „ Small.
5499 Drag with worm, Miner's.
5500 Fork, Garden.
5501 „ Hay.
5502 „ Dung.
5503 Gad steel Miner's.
5504 Hammer Hand Miner's.
5505 „ Sledge.
5506 Hand Cuff Country Spring Locks.
5507 Hoes Garden with handles.
5508 Jumper Iron Miner's.
5509 Mamoty Country, 10 lbs.
5510 „ „ 5 „
5511 „ „ 6½ „ Col. Otleys's Pattern
5512 Pole Pick Miner's
5513 Reel, Garden, Iron
5514 Rake, Iron, Garden with handles
5515 Shovel, Iron, Miner's
5516 Scoop Spoon, Iron, Miner's
5517 Shears for Box Hedges
5518 Tompion Iron, Flat at both ends
5519 Trowel, Garden, for banking
5520 Wire Priming Miner's Copper
5521 Wedge Medling Miner's.

5522 Fork, Cast Steel, Garden, Europe, belonging to J. Rhode, Esq., Inspector of Prisons.
5523 Chissel, Carpenter's Firmer 1¼ Ins.
5524 „ „ „ 1¼ „
5525 „ „ „ ⅞ „
5526 „ „ „ ¾ „
5527 „ „ „ ⅝ „
5528 „ „ „ ⅜ „
5529 „ „ Mortice ½ „
5530 „ „ „ ⅜ „
5531 „ „ „ ¼ „
5532 „ Turner's Tapering 2 „
5533 „ „ „ 1¾ „
5534 „ „ „ 1½ „
5535 „ „ „ 1¼ „
5536 „ „ „ 1 „
8537 „ „ „ ¾ „
5538 „ „ „ ⅝ „
5539 „ „ „ ⅜ „
5540 „ „ „ ¼ „
5541 „ Stud Gun Stockers.
5542 „ Trigger „ „

*Chissels, Gun Stocker's* 20 *per set.*

5543 Chissel Firmer 2½ Ins.
5544 „ „ 2 „ (2)
5545 „ „ 1 „
5546 „ „ ⅞ „
5547 „ „ ½ „ (2)
5548 „ „ ¼ „
5549 „ „ 3/16 „
5550 „ „ ⅛ „
5551 „ „ Cross Point.
5552 Gouge „ ⅝ Ins.
5553 „ „ ½ „
5554 „ „ ⅜ „ (2)
5555 „ „ 5/16 „
5556 „ „ ¼ „ (2)
5557 Chissels Foot (2)
5558 Fire Shot or Coffin's Grape 56 Pdr.
5559 „ „ „ 32 „
5560 „ „ „ 18 „
5561 Block Gin Iron Brass Sheaves Treble.
5562 „ „ „ „ „ Double.
5563 Hammer with Turn Screws.
5564 Pincers Gun.
5565 Auger Fuze Brace with Bits and Index.
5566 „ „ Hand „ „
5567 Gauge Brass for Shell Sides 24 Pdr.
5568 „ „ „ Bottoms Small.
5569 „ Iron Shot High Low 68 Pdr.
5570 „ „ „ „ „ 8 Ins.
5571 „ „ „ „ „ 56 Pdr.
5572 „ „ „ „ „ 42 „
5573 „ „ „ „ „ 24 „
5574 „ „ Shell „ „ 4⅗ Ins.
5575 Lock Brass Pad Double 3¼ „
5576 „ „ „ „ 3 „
5577 „ „ Box „ 3 „

*Rope received from Bangalore and tested in the Arsenal of Bangalore in November* 1856.

5578 Rope, Country, 3¼ Inch Tarred made from Pooty Mungem 12¼ yds.
5579 Rope, Country, 3¼ Inch Tarred made from Pooty Mungem 32 yds.
5580 „ „ 3½ made from Country Aloes or Cuthalanar 22 „
5581 „ „ 3 Janapeinnar 34 „
5582 „ „ 2½ „ „ 17 „
5583 „ „ 1 Cuthalaur 9 „
5584 „ „ ¾ „ Marool 17 „
5585 Line Log Country Marool 7 „

*Rope received from Secunderabad and tested in the Arsenal of Fort Saint George, in Sept. and Decr.* 1856.

5586 Rope Hingolee Sunn Fibre 4½ Ins. 89½ yds.
5587 „ Ellichapore Burroo „ 4½ „ 40½ „
5588 „ „ Umbarree „ 4 „ 43 „
5589 „ Hingolee Sunn „ 3½ „ tarred 102 „
5590 „ „ „ „ 3½ „ 27 21/56 „
5591 „ „ Umbarree „ 3¼ „ 30 „
5592 „ „ „ „ 3½ „ 27 „
5593 „ Ellichapore „ „ 3½ „ 44 „
5594 „ Hingolee Sunn „ 3 „ 27 „
5595 „ „ „ „ 2½ „ 43 „
5596 „ „ Umbaree „ 2½ „ 47 „
5597 „ Ellichapore „ „ 2½ „ 42 „
5598 „ „ Punhairee „ 2½ „ 42 „
5599 „ Country Sunn „ 4¾ „ 47½ „
5600 „ „ „ „ 3½ „ 52 „
5601 „ „ „ „ 3 „ 53 „
5602 „ „ „ „ 2 „ 53 „
5603 Specimen of the Sunn Fibre 1⅛ lbs.

*Burmese Wood.*

5604 Therapee or Calophyllum longifolium.
5605 Teeka Loung Tha or Radal.
5606 Tong Byne.
5607 Penlay Pyoung.
5608 Kanazoo a Forest Fruit Tree.
5609 Rannan Tha or Crab Tree.
5610 Kya Nau.
5611 Panawah.
5612 Thu Byke or Shabay Kya.
5613 Gongoo or Gangan.
5614 Toungalay.
5615 Bong Long Tha.
5616 Tha Nut Rhee.
5617 Ma Tai Yo.
5618 Rya Mouk.
5619 Pa Ka Than.
5620 Thee Bew Tha.
5621 Ryezai.
5622 Myouk Sho.
5623 Rye yo Thoo.
5624 Sowyew or Chissel Handle Tree.
5625 In Jin.
5626 Theetsee.
5627 Annan Tha.
5628 Thingan.
5629 Pyeng khadoc.
5630 Mezzalee.
5631 Meenaban.
5632 Pouk Tha.
5633 Mai Ray.

5634 Emma Nee.
5635 Saway Do.
5636 Thayet Rya.
5637 Chin Zooay.
5638 Than That.
5639 Model of the Madras Light House in Ebony made in the Carpenter's shop intended to be used as an Ink stand.

MR. W. KOMARECK, EXHIBITOR.

*Manufactures in Papier Mache.*

| | | | R. | A. | P. |
|---|---|---|---|---|---|
| 5640 | 1 | large triple vase (blue) containing grapes, pineapples, oranges pomegranates, mangoes and pomplemos | 35 | 0 | 0 |
| 5641 | 1 | large triple vase (white) containing do. do. | 35 | 0 | 0 |
| 5642 | 1 | double (blue) containing do. | 20 | 0 | 0 |
| 5643 | 1 | do. do. do. | 14 | 0 | 0 |
| 5644 | 1 | do. do. do. | 12 | 0 | 0 |
| 5645 | 1 | do. white | 18 | 0 | 0 |
| 5646 | 1 | do. do. do. | 12 | 0 | 0 |
| 5647 | 1 | single (blue) | 10 | 0 | 0 |
| 5648 | 1 | do. do. | 10 | 0 | 0 |
| 6649 | 5 | Pineapple and grapes on stand (each) | 4 | 0 | 0 |
| 5650 | 6 | Pomegranate, mangoe & orange on stand (each) | 3 | 0 | 0 |
| 5651 | 12 | burst pomegranates on stands (each) | 0 | 12 | 0 |
| 5652 | 1 | Roast Turkey | 10 | 8 | 0 |
| 5653 | 1 | do. do. | 10 | 8 | 0 |
| 5654 | 1 | do. do. | 10 | 8 | 0 |
| 5655 | 1 | do. do. | 10 | 8 | 0 |
| 5656 | 1 | Yorkshire ham (cut) | 9 | 0 | 0 |
| 5657 | 1 | do. do. do. | 9 | 0 | 0 |
| 5658 | 1 | Tart | 2 | 8 | 0 |
| 5659 | 1 | do. | 2 | 8 | 0 |
| 5660 | 1 | do. | 2 | 8 | 0 |
| 5661 | 1 | do. | 2 | 0 | 0 |
| 5662 | 1 | do. | 2 | 0 | 0 |
| 5663 | 1 | Plumb cake | 1 | 8 | 0 |
| 5664 | 1 | do. do. | 1 | 8 | 0 |
| 5665 | 1 | Victoria Cheese (cut) | 4 | 0 | 0 |
| 5666 | 1 | do. do. do. | 4 | 0 | 0 |
| 5667 | 1 | do. do. do. | 4 | 0 | 0 |
| 5668 | 1 | do. do. do. | 4 | 0 | 0 |
| 5669 | 1 | do. do. do. | 4 | 0 | 0 |
| 5670 | 1 | do. do. do. | 4 | 0 | 0 |
| 5671 | 1 | Bottle with Snake round | 0 | 12 | 0 |
| 5672 | 1 | do. do. do. | 0 | 12 | 0 |
| 5673 | 1 | Rock Snake on stand | 3 | 0 | 0 |
| 5674 | 1 | do. do. do. | 3 | 0 | 0 |

MRS. KOMARECK, EXHIBITOR.

*Manufactures in raised Berlin Wool.*

| | | | R. | A. | P. |
|---|---|---|---|---|---|
| 5675 | 1 | King Charles' Spaniel (large as life) with glass eyes, in Satin wood frame, | 50 | 0 | 0 |
| 5676 | 1 | Delhi Scarf worked with gold. | 70 | 0 | 0 |

MANAR. SREEVENCATASEM CHITTY, EXHIBITOR.

| | | | Rs. |
|---|---|---|---|
| 5677 | Pair | Silver utter stand with silver bottles, | 85 |
| 5678 | ,, | Flower Trees with stand, | 60 |
| 5679 | ,, | Elephants, | 85 |
| 5680 | ,, | Horses, | 50 |
| 5681 | ,, | Tigers, | 50 |
| 5682 | ,, | Fowls, | 50 |
| 5683 | ,, | Double mouthed Birds, | 60 |
| 5684 | ,, | Deers, | 40 |
| 5685 | ,, | Cows, | 40 |
| 5686 | ,, | Rose water Bottles, | 25 |
| 5687 | ,, | ,, ,, ,, Small, | 20 |
| 5688 | ,, | Mace Boxes, | 40 |
| 5689 | ,, | Lighting Dolls, | 30 |
| 5690 | ,, | Rose Bottle Stands, | 15 |
| 5691 | ,, | ,, ,, ,, | 15 |
| 5692 | ,, | Looking Glass Box covered with Silver, | 100 |

*Manufactures with Beads.*

| | | | |
|---|---|---|---|
| 5693 | Cot with steps and 4 Silver tops, | | 35 |
| 5694 | Picture, | | 20 |
| 5695 | ,, | Small, | 15 |

THE REVENUE BOARD, MADRAS, EXHIBITORS.

*Samples of Prize Products from Provincial Exhibitions.*

*From Nellore.*

| | | |
|---|---|---|
| 5696 | Indigo, | 11 Cakes. |
| 5697 | Brown Paper, | 10 Quires. |
| 5698 | ,, | 2 Quires & 19 Sheets. |
| 5699 | Salt Petre, | 1 Viss & 34 Pollums. |

*Fibres*

| | | |
|---|---|---|
| 5700 | Aloe, | 1 Bundle. |
| 5701 | Plantain, | 1 ,, |
| 5702 | Jilladoo or Yerrookum, | 2 Bundles. |
| 5703 | Gogoo, | 1 ,, |
| 5704 | Iron Stones, | 3 |

*Dyes.*

| | | |
|---|---|---|
| 5705 | Chayroot, | 5 Bundles. |
| 5706 | Sooraty Bark. | |
| 5707 | Ully leaves. | |

*Vegetable Oils.*

| | | |
|---|---|---|
| 5708 | Cauroonoovoolo, | 1 Bottle. |
| 5709 | Castor Oil, | 2 ,, |
| 5710 | Vupa Oil, | 1 ,, |
| 5711 | Cocoanut Oil, | 1 ,, |

*Medicinal Substances.*

5712 Curakanyaloo.
5713 Auroodondee Bark.
5714 Naylavaymoo.
5715 Gobby Vittooloo.
5716 Naypaula seeds.
5717 Chillagiujaloo.
5718 Soogundapaula roots (Sarasaparilla)
5719 Gobby plant.
5720 Pullayroo ,,
5721 Woottaraynoo ,,
5722 Toonmy ,,
5723 Yanaga Pullayroo ,,

5724 Chauntrancy plants
5725 Tella Guljayroo,
5726 Moosty seeds.
5727 Sovinda ,,
5728 Naylathungaydoo plant.
5729 Chetty coyswarum ,,
5730 Subja seeds.
5731 Patchy Chitramoolum.

*Tanning Substances.*

5732 Rayla Bark.
5733 Toomma or Vaylum Bark.
5734 Tungadoo do.

*Gums.*

5735 Valaga.
5736 Vaylum.

*From Guntoor.*

5737 Immacondah Indigo, 5 cakes.
5738 Indigo of different sorts, 5 cakes.
5739 Country Cotton.
5740 do. do. cleaned.
5741 do. do. uncleaned.
5742 Senna.
5743 Cuddapah Indigo.

*From Tinnevelly.*

5744 American Cotton.
5745 Red ,,
5746 Nadan ,,
5747 Bourbon ,,
5748 Nutmeg 1 bag.
5749 Cloves ,,

*From Bellary.*

5750 Indigo country made.
5751 17 Specimens of Fibres.
5752 15 ,, of ropes made from the above fibres.
6753 19 ,, of oil seed.

(*The fibres, ropes and seeds forwarded by the Tahsildar of Raidroog.*)

5754 3 Yards of broad Tape.
5755 3 ,, narrow ,,

(*These Manufactured in the Bellary Looms.*)

5756 Cotton rope made at Adonie.
5757 Tanned bide made at Bellary.
5758 Leather ,, ,,
5759 Do. ,, ,,

*Specimens of Indigo from different Agents received through the Collector of Sea Customs.*

*From Messrs. Binny and Co.*

5760 4 Cakes from Messrs. Hart and Simpson's Factories in Cuddapah.
5761 4 Cakes from Messrs. Hart and Simpson's Factories in Nellore.
5762 4 ,, ,, in North Arcot.
5763 4 ,, from Native Factories in Budwail & Sidhout Talooks of Cuddapah.
5764 5 ,, ,, Caimbaum ,, ,,
5765 8 ,, ,, Chitwal ,, ,,
5766 2 ,, ,, Ongole ,, Nellore.

*From Appasawmy Pillay and Co.*

5767 3 boxes containing samples of Kurpah Indigo from Cuddapah.

*From Messrs. Nisbet & Co.*

5768 Indigo from Annacavoor, Trivatoor in the Zillah of Chittoor.

*From Messrs. Line & Co.*

5769 3 Cakes of Kurpah Indigo.

*From Sidloo Chetty & Co.*

5770 Indigo from Caloovay, Ravoor Talook Nellore.
5771 Do. Kalikery, Siddavutum, Cuddapah.
5772 Do. Moodoogoolapollum, Calastry Zemindary.

*From Messrs. Walker & Co.*

5773 6 Samples Bengal Indigo.
5774 8 do. Madras do.

*From Messrs. Lecot, Hicks & Co.*

5775 2 Samples of Indigo from Cuddapah.

*Samples of Bengal Indigo sent by the Chief Secretary to Government.*

5776 From Bauleah 1 cake.
6777 ,, Benares 5 ,,
5778 ,, Bhaugulpore 1 ,,
5779 ,, Burdwan 2 ,,
5780 ,, Jessore 8 ,,
5781 ,, Jungypore 3 ,,
5782 ,, Kishnaghur 4 ,,
5783 ,, Malda 17 ,,
5784 ,, Midnapore 2 ,,
5785 ,, Moorshedabad 2 ,,
5786 ,, Mymensingh 1 ,,
5787 ,, Naulpore 1 ,,
5788 ,, Oude 2 ,,
5789 ,, ,, Low 1 ,,
5790 ,, Purneah 1 ,,
5791 ,, Tirhoot 18 ,,
5792 Specimen of Tanjore Indigo, from Mr. Kohlhoff.

# MADRAS.

LIEUT. H. P. HAWKES, S. A. C. GENL., EXHIBITOR.

## COPPER COINS.

5793. *A series in illustration of the Copper Coinage of the H. E. I. Company.*

| No. | Names. | Year. | Design on Obverse. | Design on Reverse. |
|---|---|---|---|---|
| 1 | Company cash. | 1732 | Company's Monogram. | Date in English figures. |
| 2 | Linga chetty's c. | * 769 | do. | do. |
| 3 | Do. | 177* | do. | do. |
| 4 | Bombay pice. | 177* | do. | "Pice Bomb." 177* |
| 5 | Linga chetty's c. | *78* | do. | Date in English figures. |
| 6 | Do. | *79* | do. | do. |
| 7 to 9 | Company's cash and half cash. | 1787 | Company's Monogram and date. | do. |
| 10 and 11 | Company's Dood and Dooganie. | 1791 | do. | A balance with the word "Adul" (justice) in Hind. |
| 12 and 13 | Company's Dood. | 1794 | Comp. Arms with vizier, and motto "United East India Company" surrounded by the legend "Auspicio Regis, et Senatus Anglicæ" —at the foot is the value "48 to one Rupee" | Company's Monogram in double lines and the legend "United East India Company" date at the foot. |
| 14 | Comp.'s Dooganie. | 1794 | Company's Monogram and date. | A balance with the word "Adul" |
| 15 and 16 | Linga Chetty's c. | 180* | Comp. Monogram divided at Right angles with a cross and the letters C. C. E.—without the 4——— | Date in English figures. |
| 17 and 18 | Do. | 18** | do. | do. |
| 19 | Company's Dood. | 1802 | Company's usual Monog. divided diagonally, and date. | Same as Nos. 10 and 11. |
| 20 | Do. | 1803 | do. | do. |
| 21 | Comp.'s half cash. | 1803 | Company's Monogram. | Date in English numerals. |
| 22 to 33 | Do. | 1803 | Lion rampant bearing crown & date. | "1 Cash" in English and Hind. |
| 34 | Company's Cash. | 1804 | Company's arms with vizier and motto, surrounded by the words "East India Company" and date. | A balance with the word "Adul" (justice) and date (1219) in Hind. |
| 35 and 36 | Company's Dood & Dooganie or 20 and 10 cash. | 1808 | do. | Value in English and Hindustanee. |
| 37 to 39 | Do. | 1810 | Company's arms without vizier, motto and date. | |
| 40 | Cash. | 1816 | A Monogram apparently T. R. surmounted by a crown, "vi" in Roman numerals at foot. | "IV. K A S and date" surrounded by dots. |
| 41 to 44 | Company's Dood. | 1819 | Same as Nos. 10 and 11. | Same as Nos. 10 and 11. |
| 45 | St. Helena half penny. | 1821 | Company's arms with vizier and motto. | "St. Helena half-penny" surrounded by Laurel leaves, date in centre. |
| 46 | Cash. | 1823 | Same as No. 40. | Same as No. 40. |
| 47 | Cash. | 1824 | do. | do. |
| 48 and 49 | Company's half and quarter anna. | 1825 | Same as No. 37. | Same as No. 37. |
| 50 and 51 | Company's Dood & Dooganie. | 1825 | Same as No. 37, but date above motto. | Value in Eng. and Hind. date in Hind. surrounded by Palm leaves. |
| 52 and 53 | Company's cash and half cash. | 1825 | Same as Nos. 10 and 11. | Same as Nos. 10 and 11. |
| 54 to 56 | Comp. half, quarter and $\frac{1}{8}$ anna. | 1828 | Same as No. 37. | Same as No. 37. |
| 57 | Cash. | 1832 | Same as No. 40. | Same as No. 40. |
| 58 and 59 | Company's quarter anna and one pie. | 1833 | Same as No. 50. | A balance with the word "Adul" and date in Hind. surrounded by Value in English. |

| No. | Names. | Year. | Design on Obverse. | Design on Reverse. |
|---|---|---|---|---|
| 60 | Comp. half anna. | 1834 | Comp Arms, motto and date surmounted by the words "East India Company." | Same as No. 58. |
| 61 to 63 | Comp. half, quarter and $\frac{1}{16}$ anna. | 1835 | Company's Arms, motto and date. | Value in English and Hind. surrounded by a wreath of Laurel and the words "East India Company." |
| 64 to 66 | Cash. | 1839 | Same as No. 40. | Same as No. 40. |
| 67 to 69 | Cash. | 1841 | do. | do. |
| 70 to 72 | Cash. | 1842 | do. | do. |
| 73 | Cash. | 1843 | do. | do. |
| 74 to 76 | Cash. | 1844 | do. | do. |
| 77 to 79 | Cash. | 1845 | do. | do. |
| 80 to 88 | Comp. cent, half and quarter cent. | 1845 | Queen's head and words "Victoria Queen." | Value in English surrounded by a wreath of Laurel the words "East India Company" and date. |
| 89 | Comp. $\frac{1}{2}$ pice. | 1853 | Same as No. 61. | Value in English surrounded by a wreath of laurel, and the words "East India Company" |
| 90 to 99 | Half and $\frac{1}{16}$ anna | —— | Value in English. | Value in. |
| 93 | Cash. | | Value in Canarese and Tamil. | ... ... ... |

## COPPER COINS OF OTHER BRITISH COLONIES.

### 5794. *Ceylon.*

| | | | | |
|---|---|---|---|---|
| 1 | Ceylon (or Amaravati) coin. | A. D. 1127 ? | Coin supposed to have been struck by Sree Gaja Raja, bearing a human figure in different attitudes on either side. Vide Fig 9. Pl. xx. Vol. 6. page 298 of the Journal of the Asiatic Society. | |
| 2 | do. | ? | Inscription illegible. | Figures same as above. |
| 3 & 4 | Ceylon (or Hala Canara) coin. | ? | Similar to the above vide Pl. xx. | Vol. 6, page 293, Journal Asiatic Society. |
| 5 | Ceylon or (Hala Canara) coin. | ? | Obverse—a bull in standing attitude. Vide Fig. 15, Pl. xx. Vol. 4, page 298, Journal of the Asiatic Society. | Reverse—A human figure as in the above. |
| 5 to 13 | do. | ? | Obverse—a bull facing right. | Reverse.—Inscription in the old Canarese character. |
| 14 to 18 | do. | ? | A bull facing left. | do. |
| 19 to 22 | Ceylon Government | 1802 | An Elephant, and date. | "Ceylon Govt." surrounding a numeral signifying its value. |
| 23 to 27 | do. | 1815 | Elephant, date, the word "Ceylon" and Value in English. | Bust of George III and words Georgius III. D. G. Brittaniarum Rex. |

### 5795. *Australia.*

| | | | | |
|---|---|---|---|---|
| 1 | Penny piece. | —— | Britannia surmounted by the word "Britannia." | The Reverse presents a novelty in the art of advertising, bearing the name of a tradesman's firm at Melbourne as follows: "Annand Smith and Co. Family Grocers, Melbourne." |

### 5796. *Straits Settlements.*

| | | | | |
|---|---|---|---|---|
| 1 to 8 | Malay cash. | —— | Cock and inscription in Malay. | Inscription and date in Malay. |
| 9 & 10 | do. | —— | do. and name C. R. READ in English characters. | Star, inscription and date in Malay, date (A. H.) in English. |
| 11 | do. | —— | Cock and inscription in Malay. | do. |
| 12 & 13 | do. | —— | Inscription and date in Malay. | Inscription in Malay. |
| 15 to 19 | Sumatra cash. | 1804 | Company's Arms, motto and date, with words "Island of Sumatra." | Inscription and date in Malay. |
| 20 | Sultana cash. | 1804 | Do. with words "Island of Sultana." | do. |
| 21 & 22 | do. | 1835 | Coat of Arms supported by Horses rampant &c. and words "Island of Sultana." | do. |
| 23 | Malay cash. | 1835 | Coat of Arms supported by Horses. | do. |
| 24 | do. | —— | Inscription in Malay. | do. |

## 5797. *Canada.*

| No. | Names. | Year. | Design on Obverse. | Design on Reverse. |
|---|---|---|---|---|
| 1 | Canada Halfpenny. | 1837 | A coat of arms with shamrock, rose thistle and beaver, the Motto "Concordia salus" and "Banque du peuple" surrounded by wreath and words, "Bank Token Halfpenny 1837." | "Province du bas Canada, un Sou." with figure of ——? |
| 2 | Upper Canada Halfpenny. | 1854 | St. George and the Dragon surrounded by the words "Bank of Upper Canada" and date. | Anchor, and Sword crossed, two Cornucopiæ and Union Jack surmounted by crown with the words "Bank Token one Half penny." |
| 3 | Newfoundland Halfpenny. | —— | Coat of arms supported by two horses rampant, with Motto "Per mare per terras," crest, a vizier and mermaid. | The golden fleece with the words R. and I. Rutherford, St. John's Newfoundland. |

## 5798. *Guernsey.*

| | | | | |
|---|---|---|---|---|
| 1 | Guernsey four doubles. | 1840 | Guernsey coat of arms (three lions) and word "Guernsey" | "4 Doubles" and date. |
| 2 and 3 | One double. | 1830 | o | "1 Double" and date. |

## 5799. *Ionian Islands.*

| | | | | |
|---|---|---|---|---|
| 1 | Quarter farthing. | 1849 | Griffon holding a bundle of darts | Britannia and name. |

## 5800. *Copper Coins of Great Britain.*

| | | | | |
|---|---|---|---|---|
| 1 | Penny. | —— | King's head and usual legend. | Britannia and word 'Britannia.' |
| 2 & 3 | Pennies. | 1797 | Head of George III. and inscription George III. D. G. Rex. | Britannia, date and word 'Britannia.' |
| 4 | Farthing. | 1799 | do. and date. | Britannia word 'Britannia,' and value in English. |
| 5 | Irish halfpenny. | 1805 | do. without date. | The harp surrounded by the word 'Hibernia' and date. |
| 6 & 7 | Penny and halfpenny. | 1806 | do. with date. | Same as No. 1. |
| 8 | Halfpenny. | 1807 | do. do. | Same as No. 1. |
| 9 & 10 | Penny and halfpenny. | 1826 | Head of George IV and inscription 'Georgius IV. Dei. Gratia 1826.' | Britannia and the legend, 'Britanniar: Rex. Fid. Def.' |
| 11 | Halfpenny. | 1827 | do. | do. |
| 12 | Penny. | 1837 | Head of William IV. and inscription 'Gulielmus IV. Dei Gratia 1837.' | Same as No. 9. |
| 13 | Farthing. | 1838 | Head of Victoria and inscription 'Victoria Dei Gratia 1838.' | Same as No, 9. |
| 14 | do. | 1843 | do. | Same as No. 9. |
| 15 to 17 | Halfpenny. | 1844 | do. | Same as No. 9. |
| 17 to 17½ | Half farthing. | 1844 | 'Victoria D. G. Britanniar, Regina F. D.' and bust. | Value, date and floral emblems surmounted by crown. |
| 18 | Farthing. | 1845 | Same as No. 13. | Same as No. 9. |
| 19 | Penny. | 1853 | do. | do. |
| 20 | Model Halfpenny. | —— | Inner circle of silver with bust of Victoria and V. R. outer of copper with 'Model Halfpenny.' | Inner circle of silver with '½' outer of copper with 'Halfpenny model.' |
| 21 | Quarter farthing | 1835 | 'Gulielmus IV. Dei Gratia' and bust | Britannia and words 'Britanniar. Rex. Fid. Def.' |
| 22 | Wilkinson's token. | 1787 | Bust with words 'John Wilkinson iron master.' | Forge with tilt-hammer and date. |
| 23 | do. | 1793 | do. | do. |
| 24 | Liverpool Halfpenny. | —— | Bishop with mitre and crozier and words 'Cronebane Halfpenny.' | Ship of war. laurel branches and words 'Liverpool Halfpenny.' |
| 25 | Isaac Newton's halfpenny. | 1793 | 'Isaac Newton' and bust. | Caduceus winged with cornucopiæ. and word 'Halfpenny.' |

| No. | Names. | Year. | Design on Obverse. | Design on Reverse. |
|---|---|---|---|---|
| 26 | Halfpenny. | —— | Bust wearing Duke's coronet and words 'John of Gaunt' duke of Lancaster.' | Initials H. M. Co. and words 'Camac, Kyan and Camac, Halfpenny.' |
| 27 | Token. | —— | Queen's head and words 'Cannock White and Co. Dublin and Cork.' | Words 'Cannock White and Co. Drapers, 14 Henry street, Dublin, near the Post Office.' |
| 28 | One farthing Token. | 1838 | 'One farthing 1838' surrounded by 'Ogilvie and Bird, Cork.' | 'Payable at 48 and 49 Patrick St.' surrounded by 'Drapers and Silk Mercers.' |
| 29 | Macclesfield Halfpenny. | 1789 | Britannia seated on some Machinery the word 'Halfpenny' and date. | Intials 'R. and Co.' surmounted by a beehive and word 'Macclesfield' |
| 30 | Penny. | 1811 | A crown surrounded by the words 'Birmingham and Leith 1811.' | 'One Penny' surrounded by legend 'Crown Copper Company.' |
| 31 | Cornish Penny. | 1811 | Cornish mine engine, date and words 'Cornish Penny.' | A Fish and pigs of lead surrounded by words 'For the accommodation of the county' |
| 32 | Cornish half an ounce. | 1791 | A Shield with 15 dots surmounted by a crown and words 'Cornish copper half an ounce 1791.' | Hooded figure and garland of oak leaves. |
| 33 | Spence's Token. | 1795 | A Boar trampling on the emblems of of church and state with words 'Pigs meat published by T. Spence London.' | Words 'Thos Spence, Sir Thos. More, Thos. Paine' and date surrounded by words "Advocates for Rights of man.' |
| 34 | Oliver Cromwell's farthing. | 1658 | "Charity and Change 1658." | Castle and legend "City of Limerick." |
| 35 | Charles II farthing. | —— | Irish harp crowned and words "Fra: et Hib: Rex." | "Carolus II., D. G. M. B." and coat of arms. |

## 5801. *Copper Coins of French Indian Settlements.*

| | | | | |
|---|---|---|---|---|
| 1 | Fleur-de-lis cash. | 1752 | Five Fleur-de-lis. | Date surrounded with dots. |
| 2 | do. | 1785 | do. | do do. |
| 3 to 7 | French cash. | 1836 | Gallic cock and date. | 'Poodeecherie' in Tamil. |
| 8 to 11 | Fleur-de-lis cash. | —— | One large fleur-de-lis. | do. |

## 5802. *French Continental Copper Coins.*

| | | | | |
|---|---|---|---|---|
| 0 | Soldo. | 1812 | Bust and words 'Napoleone imperatore' | Crown and words 'Regno d' Italia soldo' |
| 1 | Sous. | 161* | Head, date and inscription 'Francois de Bourbon.' | Coat of arms with fleur-de-lis &c. |
| 2 | Two Sous. | 1792 | Bust of Louis XVI and words 'Louis XVI Roi des Francais.' | A lictors bundle of rods surrounded by wreath and 2 S. with words 'La nation, la loi, le Roi, L'an 4 de la liberte.' |
| 3 | 12 Deniers. | 1792 | do. | |
| 4 and 5 | Five and ten centimes. | 1853 & 1854 | Bust of Napoleon III. and words 'Napoleon III Empereur.' | The eagle and 'Empire Francais' and value. |

## 5803. *Copper Coins of the Netherlands.*

| | | | | |
|---|---|---|---|---|
| 1 | Half Stiver. | 1822 | Coat of arms and value. | 'Nederl: Indie,' and date surmounted by a star with the letter G at foot. |
| 2 | Quarter Stiver. | 1823 | do. | do |
| 3 | do. | 1840 | do. | do with letter W. |

## 5804. *Dutch Copper Coins.*

| | | | | |
|---|---|---|---|---|
| 1 to 11 | Quarter Stiver. | 1737 to 1786 | Coat of arms. | Monogram contg. the letters V. O. C. a star and dots and date 1737-43-44-46-49-50-51-52-53-86. |
| 12 | Half cent. | 1837 | Coat of arms. | 'W.' crown and date. |
| 13 | Java pice. | 1810 | 'JAVA' and date surrounded by dots. | Monogram, apparently N. L. and value. |

## 5805. *Copper Coins of Trichinopoly.*

| No. | Names. | Year. | Design on Obverse. | Design on Reverse. |
|---|---|---|---|---|
| 1 and 2 | 40 Cash pieces. | —— | Value in Canarese and Tamil. | Value in English and Hindu in imitation of H. E. I. C. coins of 1808. |
| 3 to 5 | 20 Cash pieces. | —— | do. | do. |
| 6 to 8 | 10 Cash pieces. | —— | do. | do. |
| 9 | 5 Cash pice. | —— | do. | do. |
| 10 and 11 | 2½ Cash pieces. | —— | do. | do. |

## 5806. *Copper Coins of Delhi.*

| | | | | |
|---|---|---|---|---|
| 1 to 8 | Delhi cash. | —— | Shah Alum Badsha Jooloos 37. | |
| 9 to 14 | do. | —— | Same as above with trident mark. | Same as above with trident mark. |
| 15 to 17 | do. | —— | Mahd. Shah. | Trident mark. |
| 18 to 20 | do. | —— | —— | —— |

## 5807. *Copper Coins of Hyderabad.*

| | | | | |
|---|---|---|---|---|
| 1 and 2 | Nizam Alumgeer cash. | —— | Oblong pieces of copper, without inscription or device. | |
| 3 to 5 | Sayee dubs. | —— | Circular pieces of plain copper. | |
| 6 to 8 | Sorepoore cash. | —— | Brahmin mark, conch shell and lotus. | Fanciful device of lines and dots. |

## 5808. *Copper Coins of Travancore.*

| | | | | |
|---|---|---|---|---|
| 1 to 9 | Chuckrams. | —— | Human figure sitting. | Conch shell. |
| 10 to 12 | do. | —— | Human figure standing. | Monogram. |

## 5809. *Copper Coins of various parts of India (undeciphered.)*

| | | | | |
|---|---|---|---|---|
| 1 to 11 | Cooderay cash. | —— | Figure of a Griffon with one foot uplifted. | Hatched lines and a few unintelligible symbols. |
| 12 to 14 | ... ? | —— | A square crossed by diagonal lines and dots. | An elephant surrounded by lines and dots. |
| 15 and 16 | do. | —— | do. | A circle surrounded by two segments and two crescents. |
| 17 and 18 | do. | —— | do. | |
| 19 and 20 | do. | —— | do. | |
| 21 | do. | —— | do. | A head. |
| 22 | do. | —— | do. | Star inside a square and dots. |
| 23 to 25 | do. | —— | do. | |
| 26 to 29 | ... | ... | Two human figures under a tree. | |
| 30 | ... | ... | do. | |
| 31 to 33 | Singhum cash. | —— | A singhum with wings and tail of peacock. | Hatched lines. |
| 34 and 35 | do. | —— | A singhum. | do. |
| 35½ | do. | —— | A singhum standing | |
| 36 | Griffon cash. | —— | A griffon in usual attitude. | Nine stars within crossed lines. |
| 37 | do. | —— | do. | |
| 37½ | do. | —— | do. | |
| 38 | do. | —— | do. | A sacred bull recumbent. |
| 39 and 40 | do. | —— | A griffon seated cat-like front face. | Tamil characters. |
| 41 | do. | —— | do. | Crossed lines. |
| 42 | Singhum cash. | —— | A singhum or rather cat surrounded by dots. | A warlike instrument resembling a battle axe. |
| 43 | Elephant cash. | —— | An elephant surrounded with dots. | An elephant goad surrounded by dots |
| 44 to 47 | do. | —— | An elephant standing. | Illegible characters. |
| 48 | Hanooman cash. | —— | Hanooman standing, arms a kimbo. | |
| 49 | do. | —— | Hanooman standing, left arm uplifted | Lines. |
| 50 | do. | —— | Hanooman kneeling on one knee, one arm a kimbo, one uplifted. | Hieroglyphics unintelligible |
| 51 | do. | —— | Hanooman kneeling on one knee both hands uplifted. | Crossed lines. |
| 52 | do. | —— | Hanooman kneeling on one knee, both arms a kimbo. | |

| No. | Names. | Year. | Design on Obverse. | Design on Reverse. |
|---|---|---|---|---|
| 53 | Geruda cash. | ——— | A human figure seated tailor fashion | Four stars and lines. |
| 54 | do ? | ——— | A human figure. | Crossed lines. |
| 55 | Venketrowna cash. | ——— | Venketrowna do. | Teloogoo Characters ? |
| 56 and 57 | Gundabayroonda c. | ——— | A spread eagle with two heads. | ——Characters. ? |
| 58 and 59 | Antelope cash. | ——— | Antelope and dots. | ——Characters. ? |
| 60 | Bull cash. | ——— | Sacred bull walking. | The Tamil letter ழ surrounded by dots. |
| 61 | Fish cash. | ——— | A Fish. | ——— ? |
| 62 | Flower cash. | ——— | A Flowering shrub. | ——— ? |
| 63 to 68 | Mahd. Shah cash. | 18*4 | Mahd. Shah. | Jooloos. |
| 69 to 71 | | | | |
| 72 to 74 | | | | |
| 75 to 78 | | | * ' Shah badsha. | ' Jooloos zerb.' |
| 79 and 80 | | | Illegible characters. | ? |
| 81 and 82 | | | A human figure and bird. | ? |
| 83 | Almud Shah cash. | | Sultan al sultan &c. | Ahmed Shah. |
| 84 | | | do. | Sultan. |
| 85 | Delhi cash plated. | ——— | Shah Aalum &c. | &c. &c. |
| 86 | Copper coins of the Hyderabad states. | ——— | ? | ? |
| 87 | do. | ——— | ? | ? |
| 88 | do. | ——— | ? | ? |
| 89 | do. | ——— | ? | ? |
| 90 | do. | ——— | ? | ? |
| 91 | do. | ——— | ? | ? |
| 92 | do. | ——— | ? | ? |
| 93 | do. | ——— | ? | ? |
| 94 | do. | ——— | ? | ? |
| 95 | do. | ——— | ? | ? |
| 96 | do. | ——— | ? | ? |

5810. *Copper Coins of the Vizeyanuggur Dynasty (?).*

| | | | | |
|---|---|---|---|---|
| 1 to 7 | Gunesa cash. | ——— | Figure of Gunesa in the usual attitude. | Hatched lines and Canarese numerals |
| 8 | Gunesa cash. | ——— | Figure of Gunesa riding on an elephant. | Same as above. |
| 9 to 11 | Hanooman cash. | ——— | Hanooman standing, arms a kimbo. | Same as above. |
| 12 to 16 | Hanooman cash. | ——— | Hanooman standing, arms uplifted. | Same as above. |
| 17 to 23 | Doorgee cash. | ——— | Doorgee. | Same as above. |
| 24 to 33 | Geruda cash. | ——— | Figure of Geruda half kneeling, arms a kimbo (facing left.) | Same as above. |
| 34 | Geruda cash. | ——— | do. do. (facing right.) | Same as above. |
| 35 to 42 | Dunda-dhara cash. | ——— | Figure of a Dervish. | Same as above. |
| 43 to 50 | Peacock cash. | ——— | Figure of a Peacock. | Same as above. |
| 51 to 56 | Deer cash. | ——— | Figure of an antelope and symbol of the Moon. | Same as above. |
| 57 to 62 | Horse cash. | ——— | Figure of a horse. | Same as above. |
| 63 to 67 | Bull cash. | ——— | Figure of a bull. | Same as above. |
| 68 to 73 | Elephant cash. | ——— | Figure of an elephant with trunk uplifted. | Same as above. |
| 74 to 76 | Tiger cash. | ——— | Figure of tiger with open mouth. | Same as above. |
| 77 to 83 | Fish cash. | ——— | Figure of a fish. | Same as above. |
| 84 and 85 | Shell cash. | ——— | Figure of a conch shell. | Same as above. |
| 86 to 90 | Bell cash. | ——— | A bull surrounded by dots. | Same as above. |
| 91 and 92 | Sword cash. | ——— | A sword do. | Same as above. |
| 93 to 95 | Star cash. | ——— | A star. | Same as above. |
| 96 to 98 | Sun and Moon cash | ——— | Symbols of sun and moon. | Same as above. |
| 99 to 102 | ——— cash. | ——— | Human figure; arms elevated and palms horizontal. | Same as above. |
| 103 to 218 | Number cash. | ——— | Canarese numerals from 1 to 33. | Same as above. |

5811. *Tin Coins of the Siamese Territories (?).*

| | | | | |
|---|---|---|---|---|
| 2 | Siam coins ? of tin. | ——— | Griffon and dots. | Monogram. |

## 5812. *Bell-metal Coins of China.*

| No. | Names. | Year. | Design on Obverse. | Design on Reverse. |
|---|---|---|---|---|
| 1 to 5 | Chinese cash. | ——— | Circular, with square perforation in the centre. Chinese characters. | Circular with square perforation Chinese characters. |

## 5813. *Miscellaneous Copper Coins of Continental Europe.*

| | | | | |
|---|---|---|---|---|
| 1 to 3 | 40 20 and 2 Vintain pieces of Portugal. | 1824–8 | Coat of arms surmounted by Greek priest's cap. surrounded by laurel leaves and the motto 'in Hoc signo vinces.' | A circle of laurel leaves surrounded by legend 'Petrus I. D. G. Const:" imp: et. perp: bras: def: 1828. R. (the value of the coin has been stamped on it subsequent to its coinage.) |
| 4 | Portuguese coin of Donna Maria the First. | —— | Coat of arms and legend 'Maria I. Dei——' | Wreath and words 'Portugaliæ et Algarbiorum regina.' |
| 5 | Spanish coin of Philip? | ——— | Coat of arms and words 'Dominus Mih. . divior. | Ph...Hisp. z...orn. |
| 6 | ..... | 1744 | 'Leod sede va...Dec et. Cap.' surrounding coat of arms. | Effaced. |
| 7 | Portuguese coin of Philip the First. | | Coat of arms and legend. | Laurel wreath and words Portugaliæ et Algarbiorum Rex. |
| 8 a.b. c. d. | Portuguese coin of Maria 2nd XX-X & V. Vintains. | 1850 1853 | Coat of arms and words 'Maria dei Gratia.' | Numerals surrounded by a wreath and the words 'Portugaliæ et Algarbiorum Regina 1850.' |
| 9 | Dutch coin. | 1786 | Coat of arms and legend 'In. Deo est spes nostra.' | Monogram with the letters V. O. C. & date with two stars & arrow head. |
| 10 & 11 | Turkish coins. | ——— | Arabic inscription. | Arabic inscription. |
| 12 | Belgian two cent piece. | 1836 | Lion holding tablet bearing the words 'Constitution Belge 1831,' with motto 'L'union fait la force' and value. | Initial 'L' and crown with words 'Leopold Premier Roi des Belges 1836.' |
| 13 | Skilling banco. | 1839 | Bust and words Carl XIV Sverigs Norr. G. O. V. Konung. | Value, cross arrows, date, and oak leaf wreath. |
| 14 | German coin. | 1800 | National crest, numeral 3 and date. | Bust & words Franc. II. D. G. R. I. S. A. Ger. Hung. Boh. Rex. A, A. |
| 15 and 16 | One kreutzer, Austrian. | 1816 | Coat of arms and words 'K. K. Oesterreichische scheid emunze.' | 'Ein Kreuzer,' date and palm leaves. |
| 17 | Half kreutzer, Austrian. | 1816 | do. | do. |
| 18 | Turkish coin. | ——— | A fortified town with Mahomedan flag and six stars. | Wreath and Monogram. |
| 19 | Turkish coin. | ——— | Turkish inscription. | Turkish inscription. |
| 20 | Danish coin. | 1853 | Crown, sceptre and sword. | Bust and words 'Fredericus VII. D. G. Daniæ, V. G. Rex.' |
| 21 | Lombardo-Venetian coin. | 1822 | Crown and words 'Regno Lombardo Veneto.' | Value "2 centessimo" and date. |
| 22 | Spanish coin. | 1833 | Spanish coat of arms. | Bust and words 'Ferdin. VII. D. G. Hisp. Rex. 1833.' |
| 23 | do. | 1842 | do. | Bust and words 'Isabel 2 Por. lag de Dios, y. la Const. 1842.' |
| 24 | Portuguese coin of Joseph the First. | 1763 | Coat of arms and words 'Josephus I. D. G. Rex. P. et D. Guine.' | Words 'Macuta I. Portugueza Africa 1763.' |
| 25 | Portuguese coin of Maria and Peter. | 1778 | Globe surrounded by a broad Band with motto 'Pecunia totum circumit orbem.' | Crown, value and date and words "Maria I. et Petrus III D. G. P. et Brasil Reges"—the Spanish coat of arms has been subsequently punched on the centre of the coin. |
| 26 | Portuguese coin. | 1830 | Coat of arms and words Michael I. D. G, Port. et. Algarb. Rex. | Numeral '40' surrounded by wreath and motto 'Publica utilitati.' |
| 27 | Russian two Kopeck piece. | 1812 | Double headed spread eagle. | 2 KOPEKA. |
| 28 | do. | 1853 | ..... | do. |
| 29 | ——— ? | ——— | Human figure and motto 'Sub tuum presidium.' | Coat of arms and Motto 'Respublica Genuensis.' |
| 30 | ——— ? | 1810 | A castle, date——quarto. | Lion holding a key and motto (illegible.) |
| 31 | ——— ? | 1807 | Spread eagle—numeral 15 and various inscriptions. | Bust. Z. Hung. Boeh. Galiz. ulod. Franz. Kais. voest Koen. |

5814. *Copper Coins of America (North and South).*

| No. | Names. | Year. | Design on Obverse. | Design on Reverse. |
|---|---|---|---|---|
| 1 | Washington's cent. | —— | Bust and words 'One cent.' | Bust and word 'Washington.' |
| 2 | American cent. | 1844 | Bust of Liberty and Stars. | Value and laurel wreath with words 'United States of America.' |
| 3 | Buenos Ayres 10 Decem piece. | 1827 | Value 'Banco Nacional Buenos Ayres 1827.' | An eagle and Motto 'Ardescit virescit.' |
| 4 | Chili centavo. | 1851 | Star of five points and words 'Republica de Chili.' | Value and wreath and motto 'Economia es riqueza.' |

SILVER COINS.

5815. *A series of the Silver Coins of the H. E. I. Company.*

| | | | | |
|---|---|---|---|---|
| 1 to 5 | Linga Chetty's Fanams. | —— | A figure of the God Bhagavatie. | A monogram. |
| 6 to 9 | Company's Rupee and Fractions. | 1835 | Bust of William IV. | Value in Eng. and Hind. surrounded by wreath and words 'East India Company 1835.' |
| 10 to 13 | Do. | 1840 | Bust of Victoria. | do. |

5816. *Silver Coins of Various Indian States.*

| | | | | |
|---|---|---|---|---|
| 1 | Farockabad Rupee | | Inscription in Hindustani. | Inscription in Hind. |
| 2 | Farockabad half Rupee. | | Do. | Do. |
| 3 | Morshedabad Rup. | | Do. | Do. |
| 4 to 9 | Arcot double Rupee, Rupee and fractions by Mah. Azeez-o-deen. | —— | Inscrip. "Maimunut Manoos &c." &c. edge milled in a sloping direction. | |
| 10 to 15 | Rupee and fraction. | —— | Do. edge milled vertically. Flower monogram. | |
| 16 and 17 | Old Arcot Rupees. | | | |
| 18 and 19 | Surat Rupee and half Rupee. | —— | ..... ..... ..... | Edge plain. |
| 20 | Surat Rupee. | —— | ..... ..... ..... | Edge milled. |
| 21 to 25 | Star Pagoda and fractions. | —— | Figure of the God Bhagavatie & inscription. | Pagoda and Stars and inscription. |
| 26 | Tellicherry fanam. | —— | Jooloos &c. | |
| 27 | Cochin double pootteen. | | | |
| 28 to 34 | Travancore chuckrams. | —— | 28 to a Rupee. | |
| 35 | Narrainpett Rupee. | —— | Hydrabad currency. | |
| 36 | Raichore Rupee | | Do. | |
| 37 | Hallee sicca R. | | Do. | |
| 38 and 39 | Gidd Campany R. | | Do. | |
| 40 | Govind Buksh R. | | Do. | |
| 41 | Bazar Rupee. | | Do. | |

5817. *Silver Coins of England and Continental States.*

| | | | | |
|---|---|---|---|---|
| 1 | English Five shilling piece. | 1847 | Bust of Queen Victoria. | Coat of arms. |
| 2 | Sixpence of Elizabeth. | 1602 | ..... ..... ..... | ..... ..... |
| 3 | Sixpence of George II. | 1745 | ..... ..... ..... | ..... ..... |

| No. | Names. | Year. | Design on Obverse. | Design on Reverse. |
|---|---|---|---|---|
| 4 a. b. c. | Three penny piece. | 1843 | Bust of Victoria. | Value with crown. |
| 5 | Three half-penny piece. | 1843 | Do. | Do. |
| 6 | Portuguese Dollar. | 1836 | Coat of arms and words Maria II. D. G. Port et Algarb. Regina. | A cross and motto "In hoc signo vinces." |
| 7 | Portuguese 100 reis | 1853 | Do. | Value surrounded by a wreath. |
| 8 | Portuguese silver coin. | 176* | Coat of arms and words Josephus 1. D. G. Port Rex et B. D. | Globe and cross and motto "Signata stab. surg." |
| 9 | Spanish 2 Real. | 1852 | Coat of arms "Reina de las Espanas" and value. | Bust and words, "Isabel 2 por la Gracia de dios y la Const." and date. |
| 10 | Spanish real piece. | 1853 | Do. | Do. |
| 11 | Greek quarter drachme. | 18*3 | Coat of arms, wreath, crown and word '¼ Drachme.' | Bust and legend "Otho Basileus tes Ellados." |
| 12 and 13 | Columbian Dollar and half Dollar. | 1853 | Cap of liberty. | Eagle and snake on Cactus. |
| 14 | One Kreutzer. | 1801 | Crowned lion and initials H. D. | Value and date. |
| 15 | Shilling of George IV. | 1826 | Bust of George IV. | Lion and Crown. |
| 16 | Quarter franc of Louis Phillippe. | 1843 | | |

## 5818. *Gold Coinage of the H. E. I. Company.*

| | | | | |
|---|---|---|---|---|
| 1 | Gold mohur. | | | |
| 2 | Half mohur. | | | |
| 3 | Tirjaie or Five Rupee price. | | | |

## 5819. *Gold Coins of various Native States.*

| | | | | |
|---|---|---|---|---|
| 1 to 4 | Nazir-ood-deen's Gold coins. | | Persian Inscription. | Persian Inscription. |
| 5 | Mahd. Shah's. | | Do. | Do. |
| 6 | Shah Jehan's. | | Do. | Do. |
| 7 | Akhber's round Mohur. | | Do. | Do. |
| 8 | Akhber's square Mohur. | | Do. | Do. |
| 9 to 11 | Moolraj gold Rs. | | Do. | Do. |
| 12 | Chanar cash (Venetian Ducat ?) | | Figure of the Virgin. | ..... ..... |
| 13 and 14 | Deenar and half deenar of Constantinople. | —— | The word "Constantinople" in Arabic, date and border. | Monogram. |
| 15 | Feringheepetta Pagoda. | —— | Figure of Bhagavatie. | Dots (coined at Porto Novo.) |
| 16 | Poolie Pagoda. | —— | Do. | Star and Dots. |
| 17 | Kirkee Pagoda. | —— | Do. | Dots, (coined at Cuddapa.) |
| 18 and 19 | Parullai Kaveri Pagoda and half. | —— | Do. | Dots. |
| 20 | Ramasamy Pagoda. | —— | Rama Seeta and Luchmee. | |
| 21 to 23 | Vencatapuddie Pag. | —— | Figure of god Vencata. | Balbund inscription. |
| 24 | Lutchmenarraina Pagoda. | | | |
| 25 and 26 | Luchmedavee Pag. and Fanam. | —— | Figure of Luchmee. | |

| No. | Names. | Year. | Design on Obverse. | Design on Reverse. |
|---|---|---|---|---|
| 27 | Jumboo Pagoda. | —— | Oval pieces of gold with only a punch mark; apparently very old. | |
| 28 | Hanooman Pagoda. | —— | Hanooman. | |
| 29 to 31 | Pundeemala, or Hurris Chunder. | —— | Figure of a pig or crocodile. | Reverse similar to the Travancore silver chuckrams. |
| 32 and 33 | ———— ? | —— | Figure of a Tortoise. | Do. |
| 34 and 35 | Cuttary, or Moongolegay. | —— | Figure of a Dagger. | Do. |
| 36 | Fish Fanam. | —— | Figure of Fish. | |
| 37 to 39 | Ashrufie fanam. | —— | Inscriptions in Hindustani, varying in different coins, "Alumgeer" on some. | |
| 40 | Cochin fanam. | —— | Concave like limpet shell. | |
| 41 to 43 | Gopaul Chuckra fanam. | —— | Very Inferior gold. | |

## THE MYSORE COINAGE.

A SERIES OF GOLD, SILVER, AND COPPER COINS IN ILLUSTRATION OF THE MYSORE CURRENCY.

### 5820. *Gold Coins of Mysore.*

| | | | | |
|---|---|---|---|---|
| 1 and 2 | Canteroy Fanam. | —— | Figure of the Nursima avater. | Symbols of the sun and moon. |
| 3 | Old Bahadoory Pagoda. | —— | Figure of. | Hyder's initial. |
| 4 | New Bahadoory Pagoda. | —— | Same as above. | Same as above. |
| 5 and 6 | Ikkery Fanam. | —— | Same as above. | Same as above. |
| 7 and 8 | Adda Calicut Fanam. | 1166 | "Calicut Zerb" and date. | Same as above. |
| 9 | Tippoo's Ahmuddy or gold mohur. | 1198 | Hindustani Inscription. | Hindustani Inscription. |
| 10 | Tippoo's Sidduckee or half mohur. | —— | Same as above. | Same as above. |
| 11 | Sooltanie Pagoda. | 1198 | Hindustani Inscription. | Hyder's initial. |
| 12 | Sooltanie Pagoda. | 1199 | Do. | Do. |
| 13 | Sooltanie Pagoda. | 1200 | Do. | Do. |
| 14 | Sooltanie Pagoda. | 1216 (N. S.) | Do. | Do. |
| 15 | Dooyeem Fanam. | 1199 | "Zerb Puttun" and date. | Hyder's initial. |
| 16 | Dooyeem Fanam. | 1200 | Same as above. | Same as above. |
| 17 | Dooyeem Fanam. | 12** | Same as above. | Same as above. |
| 18 to 20 | Ayul Fanam. | 1219 | ..... ..... ..... | Same as above. |
| 21 | Nuggur-salay Fanam. | 1199 | "Zerb nuggur" and date. | Same as above. |
| 22 and 23 | Nuggur-salay Fanam. | 1200 | "Zerb nuggur" and date. | Same as above. |
| 24 | Dhotie Fanam. | 1217 | ..... ..... ..... | Same as above. |
| 25 and 26 | Sooltan Calicut. | 1200 | Calicut Zerb and date. | Same as above. |
| 27 | Sooltan Calicut. | 1215 | Calicut Zerb and date. | Same as above. |
| 28 and 29 | Syed Sabee Fanam. | —— | Khalekhabad Zerb and date. | Same as above. |
| 30 | Farockie Pagoda. | 1220 | "Farockie." | |
| 31 | Kristna raj Pagoda. | —— | Figure of Cali. | "Sree Kristna Raj" in Nagari. |
| 32 | Kristna raj ½ Pag. | —— | Same as above. | |
| 33 and 34 | Cali or Doorgee F. | | | |
| 35 | Doorgee Pagoda. | —— | Doorgee. | |
| 36 and 37 | Doorgee ½ Pagoda. | | | |

| No. | Names. | Years. | Design on Obverse. | Design on Reverse. |
|---|---|---|---|---|
| 38 | Molay Doorgee Pag. | —— | Figure of Doorge. | |
| 39 | Molay Doorgee ½ Pagoda. | —— | Do. | |
| 40 | Culookontay ½ Pag. | —— | Do. | (Said to be a forgery.) |
| 41 and 42 | P. Balapoor Fan. | —— | Word Balapoor in Hind. | Word Balapoor in Hind. |
| 43 to 45 | L. Balapoor or Poodoo' badsha Fan. | —— | Do. | Do. |
| 46 and 47 | Nundy Fanam. | —— | Monogram. | Monogram. |
| 48 and 49 | Seera Fanam. | —— | Do. | Do. |
| 50 | Colar Mahd. Shahee. | —— | Zerb Colar. | Mahd. Shah. |
| 51 | Ikkery Pagoda. | —— | Figures of | "Sree" in Nagari. |
| 52 | Seevarai ½ Pagoda. | | | |
| 53 and 54 | Coondghull Fanam. | —— | Twelve dots. | Plain. |
| 55 and 56 | Soobroya Fanam. | —— | A cobra in crawling attitude. | "Sree" in Nagari. |
| 57 | Puddugee Soobroya Fanam. | —— | A cobra with hood distended | Same as above. |
| 58 and 59 | Buswan Fanam. | —— | A bull. | "Shahoo raja." |
| 60 to 62 | Nerputtie Fanam. | | | |
| 63 | Gootie Fanam. | | | |
| 64 | Harponhully Pagoda. | —— | Figure of Doorgee? | |
| 65 | Gugputtee Pagoda. | —— | An Elephant. | A scroll. |
| 66 | Gugputtee Fanam, | —— | do. | do. |
| 67 to 69 | Namdharie Fanam. | —— | The Brahmin mark. | |
| 70 and 71 | Jinkee Fanam. | —— | A Griffon. | |
| 72 | Chendoo Bahadoorie Fanam. | | | |
| 73 | Parsee Fanam. | —— | Inscription in Hind. | Inscription in Hind. |
| 74 to 76 | Gidd Canteroy Fanam. | —— | Figure of Nursima. | Symbols of sun and moon. |

## 5821. *Silver Coins of Mysore.*

| | | | | |
|---|---|---|---|---|
| 1 | Chicca Deo Raj Fanam. | —— | Figure of Cali. | "Chicca deo Raj" in Canarese. |
| 2 | Nokara or Two Rupee Piece of Tippoo. | —— | Inscription in Hind. | Inscription in Hind. |
| 3 to 5 | Tippoo's Rupees. | —— | Same as above. | Same as above. |
| 6 and 7 | Tippoo's half Rupees. | —— | Same as above. | Same as above. |
| 8 | Tippoo's ¼ Rupee. | —— | Backarie zerb Puttun. | |
| 9 and 10 | Tippoo's ⅛ Rupee. | —— | Cazmi zerb puttun. | |
| 11 and 12 | Raja Rupee. | —— | Inscription Hind. | Inscription in Hind. |
| 13 and 14 | Raja's ¼ Rupee. | | | |
| 15 and 16 | Uddah or half Fanam. | | | |
| 17 to 19 | Hagah or ¼ Fanam. | | | |
| 20 and 21 | Cali Fanams. | —— | Figure of Cali. | Words, "Meillie hanna." |

5822. *Copper Coins of Mysore.*

| No. | Names. | Year. | Where Coined. | Design on Obverse. | Design on Reverse. |
|---|---|---|---|---|---|
| 1 | Mysore Dood. | 1190 | Capital. | Elephant facing right. | "Puttun zerb" and date. |
| 2 | Mysore Dood. | 1200 | Nuggur. | Elephant facing right and date from R. to L. | "Nuggur zerb." |
| 3 | Mysore Dood. | 1200 | Calicut. | Same as above. | "Calicut zerb" sun &c. |
| 4 & 5 | Mysore Dooganies. | 1200 | Capital. | Eleph. facing left, date L.R. | "Puttun zerb." |
| 6 to 8 | Mysore Cash. | 1200 | Do. | Same as above. | Do. |
| 9 | Mysore Dooganie. | 1201 | Do. | Eleph. facing left, date R.L. | Do. |
| 10 to 12 | Mysore Doods. | 1210 | Do. | Do. | Do. |
| 13 to 15 | Mysore Cash. | 1210 | Do. | Do. | Do. |
| 16 | Mysore Cash. | 1210 | Bangalore. | Elephant facing right, date L. R. | "Bangalore zerb." |
| 17 | Mysore Dood. | 1215 | Calicut. | Elephant facing right, date R. L. | "Calicut zerb." |
| 18 | Mysore Dood. | 1216 | ..... | Eleph. facing left, date R.L. | |
| 19 | Mysore Dood. | 1216 | Nuggur. | Elephant facing right, date R. L. | "Nuggur zerb." |
| 20 | Mysore Doogany. | 1216 | Nazarbar. | Eleph. facing left, date R.L. | "Nazarbar zerb." |
| 21 | Mysore Dood. | 1216 | Capital. | Do. | "Puttun zerb." |
| 22 | Mysore Cash. | 1216 | Bangalore. | Do. | "Bangalore zerb." |
| 23 | Mysore Cash. | 1216 | Do. | Elephant facing right, date L. R. | Do. |
| 24 | Mysore Cash. | 1216 | Nuggur. | Eleph. facing left, date R.L. | "Nuggur zerb." |
| 25 | Mysore Dood. | 1217 | Islamabad. | Do. | "Islamabad zerb." |
| 26 | Mysore Dooganie. | 1217 | ..... ... | Do. | |
| 27 to 30 | Mysore Cash. | 1217 | Capital. | Do. | "Puttun zerb." |
| 31 | Mysore Dood. | 1217 | Furkee. | Do. | "Furkee zerb." |
| 32 & 33 | Mysore Dooganie. | 1217 | Capital. | Do. | "Puttun zerb." |
| 34 | Mysore Dood. | 1218 | Furkee. | Do. | "Furkee zerb." |
| 35 | Mysore Dood. | 1218 | Bangalore. | Do. | "Bangalore zerb." |
| 36 | Mysore Dood. | 1218 | Islamabad. | Do. | "Islamabad zerb." |
| 37 | Mysore Dood. | 1218 | Nuggur. | Do. | "Nuggur zerb." |
| 38 | Mysore Dooganie. | 1218 | Feizabad. | Do. | "Feizabad zerb." |
| 39 | Mysore Dooganie. | 1218 | Furkhabad. | Do. | "Furkhabad zerb." |
| 40 | Mysore Dooganie. | 1218 | Bangalore. | Do. | "Bangalore zerb." |
| 41 | Mysore Dooganie. | 1218 | Moozufferabad. | Do. | "Moozufferabad zerb." |
| 42 | Mysore Cash. | 1218 | Capital. | Do. | "Puttun zerb." |
| 43 to 45 | Mysore Cash. | 1218 | Bangalore. | Do. | "Bangalore zerb." |
| 46 | Mysore Cash. | 1218 | Capital. | Eleph. facing left, date L.R. | "Puttun zerb." |
| 47 & 48 | Mysore Half-cash. | 1218 | Bangalore. | Eleph. facing left, date R.L. | "Bangalore zerb." |
| 49 & 50 | Mysore Dooganies. | 1218 | Do. | Do. | Do. |
| 51 & 52 | Mysore Cash. | 1218 | Do. | Do. | Do. |
| 53 & 54 | Mysore Dood. | 1219 | Nuggur. | Do. | "Nuggur zerb." |
| 55 & 56 | Mysore Dooganie. | 1219 | Capital. | Do. | "Puttun zerb." |
| 57 to 59 | Mysore Dooganie. | 1219 | Bangalore. | Do. | "Bangalore zerb." |
| 60 | Mysore Half-cash. | 1219 | Do. | Do. | Do. |

| No. | Names. | Year. | Where Coined. | Design on Obverse. | Design on Reverse. |
|---|---|---|---|---|---|
| 61 | Mysore Dooganie. | 1220 | Capital. | Elephant facing left & date. | "Puttun zerb." |
| 62 to 72 | Mysore Cash. | 1220 | Do. | Elephant facing R. | Date, the word "Akhtur' and "zerb puttun." |
| 73 | Mysore Half-cash. | 1220 | Do. | Do. | Date and ——— |
| 74 | Mysore Dood. | 1221 | Do. | Eleph. facing R. and date. | "Puttun zerb." |
| 75 | Mysore Dood. | 1221 | Do. | Eleph. facing L. and date. | Do. |
| 76 | Mysore Dooganie. | 1221 | Feizabad. | Eleph. facing R. and date. | "Feizabad zerb." |
| 77 & 78 | Mysore Cash. | 1221 | Capital. | Do. | "Puttun zerb." |
| 79 | Mysore Cash. | 1221 | Do. | Do. | "Akhtur zerb Puttun." |
| 80 | Mysore Dood. | 1222 | Nuggur. | Eleph. facing L. date R. L. | "Zahera zerb Nuggur." |
| 81 to 84 | Mysore Doods. | 1222 | Capital. | Eleph. facing R. date R. L. and Mouloodie. | "Zahera zerb Puttun." |
| 85 | Mysore Dooganie. | 1222 | Nuggur. | Eleph. facing L. date R. L. | "Baheram zerb nuggur." |
| 86 to 89 | Mysore Dooganie. | 1222 | Capital. | Do. | "Baheram zerb Puttun." |
| 90 & 91 | Mysore Cash. | 1222 | Do. | Eleph. facing R. date R. L. | "Akhtur zerb Puttun." |
| 92 to 94 | Mysore Cash. | 1222 | Do. | Do. | "Zerb Puttun." |
| 95 | Mysore Double Dood. | 1223 | Do. | Eleph. facing R. date Mouloodie and a square device. | "Mushteri zerb puttun daroolsultanut." |
| 96 | Mysore Dood. | 1223 | Do. | Eleph. facing R. and date. | "Zerb Puttun." |
| 97 | Mysore Dood. | 1223 | Do. | Eleph. facing R. and date Mouloodie. | "Zahera zerb Puttun." |
| 98 & 99 | Mysore Dooganie. | 1223 | Do. | Eleph. facing L. & date R. L. | "Baheram zerb Puttun." |
| 100 | Mysore Cash. | 1223 | Do. | Do. | "Akhtur zerb Puttun." |
| 101 | Mysore Dood. | 1224 | Do. | Eleph. facing R. and Hind. letter A. | Date Mouloodie "Zakera zerb Puttun." |
| 102 | Mysore Dood. | 1224 | Do. | Eleph. facing R. and date. | "Zerb Puttun." |
| 105 to108 | Mysore Dooganies. | 1224 | Do. | Eleph. facing R. & letter A. | Date "Baheram zerb puttun." |
| 109 to115 | Mysore Cash. | 1224 | Do. | Do. | Date "Akhtur zerb Puttun." |
| 116 | Mysore Half-cash. | 1224 | Do. | Do. | Date "—— zerb Puttun." |
| 117 to119 | Mysore Double Dood. | 1225 | Nuggur. | Eleph. facing R. & letter B. surrounded by a device. | "Zerb Puttun daroolsultnut sun mouloodie Mushteri." |
| 120 to125 | Mysore Dood. | 1225 | Capital. | Eleph. facing R. & letter B. | Date mouloodie "Zahera zerb puttun." |
| 126 | Mysore Dood. | 1225 | Nuggur. | Do. | Date Mouloodie "Zahera zerb puttun." |
| 127 to132 | Mysore Dooganie. | 1225 | Capital. | Do. | Date "Baheram zerb puttun." |
| 133 to135 | Mysore Dood. | 1226 | Do. | Eleph. facing R. & letter T. | "Zahera zerb Nuggur" and date Mouloodie. |
| 336 to138 | Mysore Dood. | 1226 | Do. | Do. | "Zahera zerb Puttun" & date Mouloodie. |
| 139 | Mysore Dooganie. | 1226 | Do. | Do. | "Baheram zerb Puttun." |
| 140 to151 | Mysore Cash. | 1226 | Do. | Do. | "Akhtur zerb Puttun." |
| 152 | Mysore Half-cash. | 1226 | Do. | Do. | "—— zerb Puttun." |
| 153 to155 | Mysore Dood. | —— | Do. | Eleph. facing Right. | "Zerb Puttun." |
| 156 | Mysore Dooganie. | —— | Do. | Do. | Do. |
| 157 | Mysore Cash. | —— | Do. | Do. | Do. |

| No. | Names. | Year. | Design on Obverse. | Design on Reverse. |
|---|---|---|---|---|
| 158 to 161 | Mysore Doods. | —— | Elephant f. Left, symbols of sun and moon, and Sree. | Value in various languages. |
| 162 to 165 | Mysore Dooganies. | —— | Do. | Do. |
| 166 to 172 | Mysore Cash. | —— | Do. | Do. |
| 173 | Mysore Dood. | —— | Elephant f. Left, symbols of sun and moon, and Sree underlined. | Do. |
| 174 | Mysore Cash. | —— | Do. | Do. |
| 175 to 177 | MysoreChamoondie Doods. | —— | Elephant f. Left, symbols of sun and moon, Sree and word Chamoondie. | Do. |
| 178 & 179 | MysoreChamoondie Dooganie. | —— | Do. | Do. |
| 180 to 184 | Mysore Chamoondie Cash. | —— | Do. | Do. |
| 185 to 189 | Kristna raj Chamoondie Cash or 5 Pie piece. | —— | Lion with symbols of sun, moon &c. | "Kristna" and value in various languages. |
| 190 | Kristna raj Dooganie | —— | Do. | Do. |
| 191 & 192 | Kirstna raj Cash. | —— | Do. | Do. |
| 193 | Kristna raj Dood. | 1834 | Lion with symbols of sun, moon &c. and date. | Do. |
| 194 | Kristna raj Dood. | 1836 | Do. | Do. |
| 195 | Kristna raj Dood. | 1837 | Do. | Do. |
| 196 | Kristna raj Dood. | 1838 | Do. | Do. |
| 197 | Kristna raj Dood. | 1839 | Do. | Do, |
| 198 | Kristna raj Dood. | 1840 | Do. | Do. |
| 199 | Kristna raj Dooganie | 1840 | Do. | Do. |
| 200 | Kristna raj ½ Cash. | 1840 | Do. | Do. |
| 201 | Kristna raj Dood. | 1843 | Do. | Do. |
| 202 | Kristna raj Dood. | 1843 | Do. | Do. |
| 203 | Kristna raj ½ Cash. | 1843 | Do. | Do. |
| 204 | Kristna raj Cash. | —— | Elephant facing left and symbols of sun and moon. | "Sree Kristna Raj" in Nagari. |
| 205 to 207 | Mysore Dooganie & Cash. | 1220? | Elephant facing L. and date. | Khalikabad Zerb. |
| 208 to 211 | Mysore Cash. | 1220? | Elephant facing R. and date. | Do. |
| 212 to 223 | Elephant Cash. | —— | Elephant facing Right. | Hatched lines. |
| 224 to 232 | Elephant Cash. | —— | Elephant facing left. | Hatched lines and date. |
| 233 to 238 | Elephant Cash or Chendra Cash. | —— | Elephant fancing left and symbols of moon. | Hatched lines and circles. |
| 239 to 246 | Elephant Cash. | —— | Elephant facing left and symbols of sun and moon. | Do. |
| 247 | Elephant half Cash. | —— | Elephant facing left. | Hatched lines and date. |

## 5823 *Medals.*

| | | | |
|---|---|---|---|
| 1 | Medal of Louis XVI. | Bust of Louis XVI. with the legend "Louis XVI. restaurateur de la liberte Francaise." | View of the National Assembly—Legend "Abandon de tous les priveleges" and on the exergue Assemble National IV. Aout 1839. |
| 2 | Medal of Ludovicus the Great. | Bust of Ludovicus with the words "Ludovicus magnus rex Christianissimus." | Neptune crowning a warrior and Motto, "Rhoda Catalon iterum capta." |
| 3 | Do. | Do. | An angel crowning a mounted warrior and in the exergue the words "Philippus V. Hispaniarum rex Ludovici magni nepos de Germanis ad Lucariam Mantuæ XX August MDCCXI." surmounted by Motto, "Virtus avita." |
| 4 | Medal of Ludovicus XIIII. | Bust with words Ludovicus XIIII. Rex Christianissimus. | Justice with the sword and balance, a figure kneeling in front pouring Money from a cornucopia, Motto, "Poculatores bonis muletata." |
| 5 | Do. | Do. | Piety feeding the Hungry, with motto, "Fames pietate principiis sulevata MDCLXII." |
| 6 | Do. | Do. | A kneeling figure crowned presenting a key to a winged angel in return for a cornucopia of fruit, Motto, "Rex victor et locupletator" on the exergue "Insula capta MDCLXVII." |
| 7 | Medal of Ludovicus the Fifteenth. | Bust of Ludovicus and his —— with legend "Lud. XV. Fr. et. nav. Rex. Mar. ann. vict. Hisp. inf. in the exergue "Ludovici magni pronepotes." | Procession passing beneath triumphal arch. |
| 8 | Taking of the Bastile. | View of the taking of the Bastile. | |
| 9 | Battle of Marengo. | Bust of Napoleon and view of battle of Marengo. | Napoleon on horseback casting a thunderbolt at Mt. St. Bernard. |

# MADRAS.

## R. KENNEDY, ESQ. ASST. CIVIL ENGINEER, EXHIBITOR.

5824 Model of a lock with gates complete for the Sadras Canal.

## THE MADRAS SCHOOL OF INDUSTRIAL ARTS, EXHIBITORS.

5825 Minerals from the Railway cuttings between Madras, Awady and Amoor.
5826 Minerals from the first explorations of the Godavery.
5827 Minerals from the Nellore District sent by F. H. Crozier, Esq.
5828 Gypsum formations of Southern India.
5829 Gypsum formations and Fossils of Ootatoor near Trichinopoly.
5830 Gypsum formations and Fossil Shells from the Banks of the Canal near Emnore.
5931 Gypsum formations and Fossil wood and Sulphuret of Iron, Pulicat.
5832 Limestone series of Southern India.
5833 Marls.
5834 Nodular Limestones.
5835 Concretionary Limestones.
5836 Septaria or Fossil balls of Limestone.
5837 Sedimentary Limestone.
5838 Tuffaceous Limestones.
5839 Magnesian and Hydraulic Limestones.
5840 Compact Grey Limestones.
5841 Blue Limestones.
5842 Silicious Slaty Limestones.
5843 Lithographic Limestones.
5844 Marbles.
5845 Blue Mountain Limestones containing Fossils.
5846 Calcareous Spar and primitive Limestone.
5847 Sand Stones and Slate—Series.
5848 Soft Sedimentary Grits,
5849 Recent Alluvial Sandstones.
5850 New Red, White and Yellow Sandstones.
5851 Free Stones, Polishing powders and Tripoli.
5852 Soft polishing Slates.
5853 Aluminous Slates and Shales.
5854 Whet Slates and burnishing Slates.
5855 Mica Slates.
5855½ Chlorite Slates.
5856 Talc Slates.
5857 Greenstone Slates.
5858 Hornblende Slates.
5859 Slaty Granites and primitive Rocks.
5860 Flinty Slates.
5861 Clays, Fire Clays, and Pottery materials.
5862 Loams Marls and Earths used in making Bricks and building materials.
5863 White, Yellow and Brown Clays used in Pottery.
5864 Colored Clays used for Terracotta wares.
5865 Fire Clays and Materials used for Chemical wares.

## THE CHAMBER OF COMMERCE, EXHIBITORS.

Samples of produce received from England.

*(The sums marked opposite each are the selling prices in London.)*

| | | | | |
|---|---|---|---|---|
| | *Sugars.* | | | |
| 5866 | Bengal, Benares. ... ... | per cwt. | £1 | 16 0 |
| 5867 | „ Cossipore, ... | „ | 1 | 16 0 |
| 5868 | „ Date, ... ... | „ | 1 | 12 0 |
| 5869 | Siam. ... ... ... | „ | 1 | 14 6 |
| 5870 | Jamaica, ... ... ... | „ | 1 | 10 6 |
| 5871 | Barbadoes, ... ... | „ | 1 | 13 0 |
| 5872 | Porto Rico, ... ... ... | „ | 1 | 14 0 |
| 5873 | Cuba, Muscovado, ... | „ | 1 | 11 6 |
| 5874 | „ yellow clayed, ... | „ | 1 | 13 6 |
| 5875 | „ brown clayed,... | „ | 1 | 10 6 |
| 5876 | Mauritius yellow,... ... | „ | 1 | 12 6 |
| 5877 | Brazil, Pernambuco, white, | „ | 1 | 15 0 |
| 5878 | „ „ brown | „ | 1 | 8 6 |
| 5879 | „ Bahia „ | „ | 1 | 9 0 |
| 5880 | Rice, American, ... | „ | 1 | 4 0 |
| | *Saltpetre.* | | | |
| 5881 | S. American or Nitrate of Soda,... ... ... | „ | 0 | 18 0 |
| 5882 | Calcutta, good,... ... | „ | 1 | 17 0 |
| | *Coffee.* | | | |
| 5883 | Arabian Mocha, ... ... | „ | 4 | 2 0 |
| 5884 | Ceylon Plantation. ... | „ | 3 | 8 0 |
| 5885 | „ Native, ... ... | „ | 2 | 12 0 |
| 5886 | Java... ... ... ... | „ | 2 | 16 0 |
| 5887 | Singapore (Bugis) ... | „ | 2 | 9 0 |
| 5888 | S. American, Costa Rica, | „ | 2 | 19 0 |
| 5889 | „ Rio, ... | „ | 2 | 7 0 |
| 5890 | W. India, Jamaica, ... | „ | 3 | 0 0 |
| | *Wools.* | | *s.* | *d.* |
| 5891 | Australian Sydney clothing, fine | per lb. | 2 | 5 |
| 5892 | „ do. do inferior | „ | 1 | 6½ |
| 5893 | „ Van Dieman's Land comb- | „ | 2 | 3 |
| 5894 | „ ing, good Port Phillip, | „ | 2 | 4 |
| 5895 | „ Cape of G. Hope, superior. | „ | 2 | 0 |
| 5896 | „ do. inferior. | „ | 1 | 5½ |
| 5897 | „ Port Phillip greasy, | „ | 1 | 1½ |
| 5898 | German, a small Cabinet sample of very fine. | „ | 5 | 0 |
| 5899 | „ Fine | „ | 4 | 0 |
| 5900 | „ Not so fine, | „ | 3 | 3 |
| 5901 | „ Medium, | „ | 2 | 8 |
| 5902 | Portugal In grease. | „ | 0 | 7½ |
| 5903 | Peruvian Alpaca, White and coloured | 2-4 to | 2 | 8 |
| 5904 | Constantinople, Goats, good | „ | 2 | 4 |
| 5905 | Russian Merino Moscow | „ | 2 | 10 |
| 5906 | „ Odessa Brookwashed | „ | 2 | 0 |
| 5907 | „ Amskoi, good | „ | 0 | 10 |
| 5908 | Italian Skin | „ | 1 | 6 |
| 5909 | Egyptian | „ | 1 | 1 |
| 5910 | Buenos Ayres, Scoured | „ | 1 | 6 |
| 5911 | „ Common | „ | 0 | 68 |
| 5912 | S. American, Vicuna | „ | 6 | 7½ |
| 5913 | Bussorah | „ | 1 | 0 |

| | | | | | |
|---|---|---|---|---|---|
| 5914 | East India good white | | 1 to 1 | 0 | |
| 5915 | „ „ „ yellow | | „ 0 | 11 | |
| 5916 | „ „ „ brown | | 7 to 0 | 8 | |
| 5917 | „ „ „ black | | 7 to 0 | 8 | |
| 5918 | China, Shanghae | | 7 to 0 | 8 | |
| 5919 | Cashmere, white | | | 2 | 4 |
| 5920 | „ coloured. | | | 2 | 2 |
| | *Cottons.* | | | | |
| 5921 | American, middling Upland | | per lb. | 6¾ | |
| 5922 | Egyptian, fully fair | | „ | 6¾ | |
| 5923 | Brazil, good fair Paraiba | | „ | 7¼ | |
| 5924 | W. India, St. Domingo | | „ | 6 | |
| | *Silks.* | | £ | s. | d. |
| 5925 | China, Canton, | per lb. | 0 | 18 | 0 |
| 5926 | „ Taysaam, | „ | 1 | 0 | 0 |
| 5927 | „ Tsatlee, | „ | 1 | 4 | 0 |
| 5928 | „ Tram thrown in Engd. | „ | 1 | 6 | 0 |
| 5929 | „ Biganzine „ „ from Tsatlee, | „ | 1 | 8 | 0 |
| 5930 | „ „ „ China, | „ | 1 | 4 | 0 |
| 5931 | Italian, white Novi, | „ | 2 | 1 | 0 |
| 5932 | „ Fossombrone, | „ | 2 | 0 | 0 |
| 5933 | „ Raw Milan, | „ | 1 | 18 | 0 |
| 5934 | „ Carded waste, | „ | 0 | 7 | 0 |
| 5935 | „ Waste, | „ | 0 | 5 | 0 |
| 5936 | Bengal Sherripaul, Common | „ | 0 | 14 | 0 |
| 5937 | „ „ Native file | „ | 0 | 17 | 0 |
| 5938 | „ Jungypore „ | „ | 0 | 17 | 0 |
| 5939 | „ Cossimbazar, | „ | 0 | 18 | 0 |
| 5940 | „ Bakhur, | „ | 1 | 0 | 0 |
| 5941 | „ Tram thrown in Engd. | „ | 1 | 3 | 0 |
| 5942 | „ Rampore, | „ | 1 | 4 | 0 |
| 5943 | „ Best Gonatea, | „ | 1 | 5 | 0 |
| 5944 | „ Dowletpore, | „ | 1 | 6 | 0 |
| 5945 | „ Commercolly Gallempore | „ | 1 | 7 | 0 |
| 5946 | „ Biganzine thrown in Eng. | „ | 1 | 9 | 0 |
| | *Indigo.* | | | | |
| 5947 | Java, fine, | „ | 0 | 7 | 9 |
| 5948 | Bengal, good, | „ | 0 | 7 | 6 |
| 5949 | Guatemala, middling, | „ | 0 | 4 | 8 |
| | *Cochineal.* | | | | |
| 5950 | Fine Honduras, black, | „ | 0 | 6 | 0 |
| 5951 | „ „ silver, | „ | 0 | 4 | 0 |
| 5952 | Teneriffe black, | „ | 0 | 4 | 8 |
| 5953 | „ silver, | „ | 0 | 3 | 8 |
| 5954 | Mexican black, | „ | 0 | 4 | 6 |
| 5955 | „ silver, | „ | 0 | 3 | 9 |
| | *Dyes.* | | | | |
| 5956 | Seedlac, | per cwt. | 2 | 5 | 0 |
| 5957 | Shellac, Orange Button, | „ | 4 | 5 | 0 |
| 5958 | „ Liver, | „ | 2 | 18 | 0 |
| 5959 | „ Orange, | „ | 2 | 16 | 0 |
| 5960 | „ Garnett, | „ | 2 | 15 | 0 |
| 5961 | Lac dyes, various brands, | per lb. | 0 | 2 | 3 |
| 5962 | Safflower, | per cwt. | 7 | 0 | 0 |
| | *Drugs.* | | | | |
| 5963 | Turmeric, | „ | 2 | 0 | 0 |
| 5964 | Aloes Soccotrine, | „ | 14 | 0 | 0 |
| 5965 | Gamboge, | „ | 7 | 0 | 0 |
| 5966 | Dragon's Blood, *Lump*, | per cwt. | 16 | 0 | 0 |
| 5967 | „ „ *Reed*, | „ | 12 | 0 | 0 |
| 5968 | Cubebs, | „ | 6 | 10 | 0 |
| 5969 | Cardamoms, Malabar, | per lb. | 0 | 3 | 6 |
| 5970 | „ Madras, | „ | 0 | 2 | 10 |
| 5971 | „ Ceylon, | „ | 0 | 1 | 3 |
| 5972 | Nux Vomica, | per cwt. | 0 | 12 | 0 |
| 5973 | Senna, Tinnevelly, | per lb. | 0 | 0 | 10 |
| 5974 | „ Bombay, | „ | 0 | 0 | 6 |
| 5975 | Castor Berries, | per cwt. | 0 | 10 | 0 |
| 5976 | Croton Seeds, | „ | 5 | 0 | 0 |
| 5977 | Colombo Root, | „ | 2 | 10 | 0 |
| 5978 | Rhubarb, | per lb. | 0 | 5 | 0 |
| | *Gums.* | | | | |
| 5979 | Benjamin, Siam, | per cwt. | 35 | 0 | 0 |
| 5980 | „ Sumatra | „ | 25 | 0 | 0 |
| 5981 | Myrrh, | „ | 14 | 0 | 0 |
| 5982 | Arabic, | „ | 4 | 0 | 0 |
| 5983 | Olibanum, | „ | 3 | 10 | 0 |
| 5984 | Animi, | „ | 15 | 0 | 0 |
| 5985 | Dammer, | „ | 3 | 10 | 0 |
| 5986 | Cowries from Maldives, | „ | 4 | 10 | 0 |
| 5987 | Bees wax, yellow, | „ | 7 | 10 | 0 |
| 5988 | India Rubber, | per lb. | 0 | 0 | 7½ |
| 5989 | Gutta Percha, | „ | 0 | 1 | 0 |

MAJOR P. T. SNOW, EXHIBITOR.

5990 Basket, made of the Bark of a tree ornamented with Flowers worked in Moose Deer Hair, by the North American Indians.

5991 Cigar case, „ „ „ „ „

5992 Reticule or Bag, „ „ „ „

5993 Pair of slippers in Beadwork „ „

5994 3 Lacquered ornaments of Sinde Manufacture.

5995 4 D'oyleys, embroidered „ „ „

5996 Basket of spun Glass.

5997 Crochet collar.

LT. COL. W. PITT MACDONALD, EXHIBITOR.

5998 Breast Pin set with variegated Sapphire.

5999 Amber and Gold Hookah mouth piece for conditional sale, Rupees 80.

MR GEORGE PROUDFOOT, EXHIBITOR.

6000 Portrait in Oil of Mr. John Proudfoot, by J. Hubbard of London.

J. H. LEVINGE, ESQ. SUB COLLECTOR, TINNEVELLY, EXHIBITOR.

7329 6 Quart Bottles of the juice of the Paulee tree, or supposed gutta percha.

7330 Bundle of the small branches and leaves.

7331 Arm of the tree.

7332 Packet of the bark of tree.

7333 Two young plants of the tree, with seeds also planted in the same basket.

7334 Sketch of the tree, leaves, &c.

THE MADRAS RAILWAY COMPANY, LOCOMOTIVE DEPARTMENT, EXHIBITORS. (W. B. WRIGHT, ESQ., SUPERINTENDENT.)

*Articles of English Manufacture.*

7335 Grooving and rebating Machine for Timber.
7336 Saw bench for do.
(*These made by Brown, Marshall & Co. Birmingham.*)
7337 Planing Machine for Iron 2 feet stroke.
(*by Shanks & Co.*)
7338 Slotting Machine for Iron 6 inch stroke.
(*by Smith, Beacock and Tannett, Leeds.*)

*Locomotive Engine Gearing.*

7339 Twelve inch Cylinder (*cover removed.*)
7340 Steam Chest (*cover removed to show the Steam and Exhaust Ports.*)
7341 Slide valve.
7342 Do. rod.
7343 Two Eccentric sheaves, straps and rods.
7344 Quadrant with Quadrant Block and Suspension Link complete.
7345 Twelve inch Piston with Packing and Rod complete (*cover removed to show its construction.*)
7346 Cross head with motion Blocks attached.
7347 Set of Motion Bars.
7348 Connecting rod complete with brasses, straps and keys.
5349 Feed Pump with Clack Box complete.

*Tools.*

7350 Traversing Screw Jack (*England's Patent.*)
7351 Lifting Screw Jack (*Brown and Marshall's.*)

*Articles manufactured in the Madras Locomotive and Carriage Workshops.*

7352 Finished Crosshead.
7353 Unfinished do.
7354 Outside connecting rod block end fitted.
7354½ Do. do. do. rough.
7355 Pair of Rollers for carrying warehouse doors.
7356 Pair of Blocks, double and treble.
7357 Engine Screw Coupling.
7358 Model of a Railway Saloon Carriage—Scale 2 in.=1 foot.
7359 Fire Engine complete with Hose.
7360 Engine Axle Box with Brass complete.
7360½ Pattern of Carriage Axle Box.

*Smith's Tools.*

7361 40 pairs of Tongs assorted.
7362 1 Fore Hammer.
7363 1 Quarter do
7364 2 Hand do
7365 3 Set do
7366 10 Circular Sets
7367 10 pairs of Fullers of sizes.
7368 1 Flat Face.
7369 1 Flatter.
7370 10 Gouge Chissels of sizes.
7371 6 Flat Chissels.
7372 5 Square Punches.
7373 5 Round do
7374 1 Flat Punch
7375 7 Pointed Punches.
7376 6 pair Swages assorted.
7377 One set of Spanners from ¼ up to 1 inch.

*Carpenter's Tools.*

7378 1 Long jointing.
7379 1 Trying do.
7380 1 Jack do.
7381 1 T do.
7382 1 Smoothing do.
7383 1 Round Sole do.
7384 1 Cornice do.
7385 3 Moulding do.
7386 4 Rebating do.
7387 1 Plough do.

W. B. WRIGHT, ESQ., EXHIBITOR.

7388 Self acting punkah (*water power.*)

R. H. POWYS, ESQ. EXHIBITOR.

7389 Pair Burmese Slippers.
7390 Burmese cloth.
7391 „ boxes of sizes.

LT. COL. J. WHISTLER, EXHIBITOR.

7392 Bellary cumblie, Rs. 20.
7393 1 doz. pocket handkerchiefs (*Ladies'*) Rs. 6-12.

MR. E. AVERY, INSPECTOR ELECTRIC TELEGRAPH, EXHIBITOR.

7394 Cone of a Cedar of Lebanon, grown in England in Lord Cork's garden, brought away by Dr. Keess.

ARNEE T. VURRAMOORTHY CHETTIAR AND SOOBOO CHETTIAR, EXHIBITORS.

*Arnee Muslins.*

7395 1 Piece 24 feet by 4 feet 6 inch Rs. 200
7396 4 „ 40 „ „ 3 „ 4 „ each „ 30
7397 4 „ 24 „ „ 3 „ 4 „ „ „ 20
7398 1 „ 24 „ „ 3 „ 4 „ „ „ 8

P. SOMOOSOONTHRUM CHETTIAR, EXHIBITOR.

7899 Silver jug with three compartments in which 3 different kinds of liquors may be kept Rs. 170

THE NATIVE FEMALE CENTRAL SCHOOL, EXHIBITORS.

*Miss Jessy J. Hogg, Superintendent.*

| | | | | |
|---|---|---|---|---|
| 7400 | Large crochet Antimacassar, | Rs. | 4 | 0 0 |
| 7401 | Small do do | | 3 | 0 0 |
| 7402 | Bread Cloth. | | 1 | 0 0 |
| 7403 | Pairs Socks. | each, | 2 | 8 0 |
| 7404 | Crochet collar. | | 1 | 8 0 |
| 7405 | do do | | 1 | 0 0 |
| 7406 | Knitted collar | | 1 | 4 0 |
| 7407 | do do | | 1 | 0 0 |
| 7408 | 4 yards crochet lace | | 1 | 0 0 |
| 7409 | „ do do | | 1 | 0 0 |

V. NARASIMLOO CHETTY, EXHIBITOR.

| | | | | |
|---|---|---|---|---|
| 7410 | Women's cloth, gold laced, silk & cotton | Rs. | 184 | 0 0 |
| 7411 | Do. do. | „ | 137 | 10 0 |
| 7412 | Do. do. | „ | 33 | 12 0 |
| 7413 | Do. do. | „ | 18 | 8 0 |
| 7414 | Do. do. | „ | 20 | 0 0 |

| | | | | |
|---|---|---|---|---|
| 7415 | Women's cloth, gold laced, silk & cotton, Rs. | 20 | 8 | 0 |
| 7416 | Do. do. „ | 28 | 10 | 0 |
| 7417 | Do. do. „ | 20 | 4 | 0 |
| 7418 | Do. do. „ | 42 | 8 | 0 |
| 7419 | Do. do. „ | 24 | 3 | 0 |
| 7420 | Do. do. „ | 34 | 0 | 0 |
| 7421 | Do. do. | 8 | 8 | 0 |
| 7422 | Do. do. | 6 | 0 | 0 |
| 7423 | Do. do. | 5 | 1 | 0 |
| 7424 | Do. do. | 5 | 1 | 0 |
| 7425 | Do. do. | 4 | 8 | 0 |
| 7426 | Sithauday | 2 | 0 | 0 |
| 7427 | do. | 2 | 2 | 0 |
| 7428 | Turband | 7 | 14 | 0 |
| 7429 | Do. | 4 | 2 | 0 |
| 7430 | Do. Gold laced. | 19 | 8 | 0 |
| 7331 | Do. | 6 | 8 | 0 |
| 7432 | Do. | 2 | 4 | 0 |
| 7433 | Head cloth, or Rumaul, Gold laced. | 7 | 7 | 0 |
| 7434 | Do. do. do. do. do. | 59 | 0 | 0 |
| 7435 | Do. do. do. do. do. | 6 | 12 | 0 |
| 7426 | Do. do. do. do. do. | 15 | 0 | 0 |
| 7437 | Men's cloth. Gold laced. | 39 | 6 | 0 |
| 7438 | Do. do. do. | 24 | 12 | 0 |
| 7439 | Women's Petticoat or raveckay „ | 4 | 8 | 0 |
| 7440 | „ „ „ „ | 5 | 10 | 0 |
| 7441 | „ „ „ „ | 9 | 10 | 0 |
| 7442 | Gold Lace ½ oz. | 4 | 8 | 0 |

THE MADRAS SCHOOL OF INDUSTRIAL ARTS, EXHIBITORS.

7443 Potstone and Dolomite

*Materials used in Glazing Porcelain.*

7444 Quartz.
7445 Rock crystal.
7446 Selenite.
7447 Chalk.
7448 Marble.
7449 Gypsum.

*Materials used in the Manufacture of Glass.*

7450 Quartz.
7451 White sand.
7452 Hyalite.
7453 Rock Crystal.
7454 Flint.
7455 Basalt.
7456 Granite.
7457 Greenstone.

*Alkalies.*

7458 Soda
7459 Purified do
7460 Dhobies' Earth
7461 Salt
7462 Wood ashes.
7463 Pearlash.
7464 Potash.
7465 Salt petre.
7466 Borax or Tincal.
7467 Lead Ore or Galena.
7468 Minium or Yellow Oxide of Lead.
7469 Litharge or vitrified Oxide of Lead.
7470 Red Lead.
7471 Cullet or broken glass.

*Colored Earths and Materials used for Dips, Smears and Ornamental Pottery.*

7472 Metallic Ores used in coloring Pottery.
7473 Materials used for Glazing Pottery.
7474 Porcelain Materials.
7475 Kaolins.
7476 Decayed Granites or Porcelain Earths.
7477 Felspars.
7478 Albite.
7479 Cleavelandite and Fibrolite.
7480 Baryta.
7481 Magnesite.
7482 Steatite.
7483 Mica, and Talc Schists.

THE ARSENAL, FORT ST. GEORGE, EXHIBITORS

*Blocks Purchase Wooden.*

7484 Treble 12 Inches, Country.
7485 Double 12 „ „
7486 Single 12 „ „
7487 Treble 10 „ „
7488 Double 10 „ „
7489 Single 10 „ „
7490 Double 8 „ „
7491 Single 8 „ „
7492 „ 7 „ „
7493 Double 6 „ „
7494 Single 6 „ „
7495 Treble 12 „ Europe.
7496 Double 12 „ „
7497 Treble 10 „ „
7498 Double 10 „ „
7499 Snatch wooden „
7500 Double 8 Inches Iron Bound, Europe.
7501 Single 8 „ „ „
7502 Double 7 „ Europe.
7503 Single 7 „ „

*Blocks with brass rollers.*

7504 Double 9 Inches Europe.
7505 Single 9 „ „
7506 Double 8 „ „
7507 Single 8 „ „
7508 Double 7 „ „
7509 Single 7 „ „
7510 Double 6 „ „
7511 Single 6 „ „
7512 Block with Brass Sheaves & Rollers 5 Inches Double, Europe.
7513 „ „ „ „ „ 5 „ Single, Europe.

*Ropes, Country, Experimental, received from the Arsenal of Secunderabad.*

| | | | | | | |
|---|---|---|---|---|---|---|
| 7514 | Country, Sunn Fibre | 4½ | Inch. | yards | 50 |
| 7515 | „ „ „ | 3¾ | „ | „ | 50 |
| 7516 | „ „ „ | 3¾ | „ | „ | 53 |
| 7517 | „ „ „ | 4½ | „ | „ | 51 |
| 7518 | „ „ „ | 3½ | „ | „ | 56 |
| 7519 | „ „ „ | 2¼ | „ | „ | 45 |

| | | | | | | |
|---|---|---|---|---|---|---|
| 7520 | Country, Sunn Fibre | | 3½ | Inch. yards | | 52 |
| 7521 | „ | „ | 3 | „ | „ | 53 |
| 7522 | „ | „ | 3 | „ | „ | 52½ |
| 7523 | „ | „ | 2 | „ | „ | 53 |
| 7524 | Country, Hingolee, Ambarree. | | | | | |
| | | Fibre | 4½ | „ | „ | 50 |
| 7525 | „ | „ | 3 | „ | „ | 51 |
| 7526 | „ | „ | 4½ | „ | „ | 51½ |
| 7527 | „ | „ | 4 | „ | „ | 53 |
| 7528 | „ | „ | 3 | „ | „ | 52 |
| 7529 | 3 Specimens of Hingolee Ambarree Fibre | | | | | |
| 7530 | 3 „ | Sunn Fibre | | | | |

C. Ramasawmy Chitty, Dubash to Messrs. Walker and Co., Exhibitor.

7531 *Medicinal roots and shrubs.*

| | |
|---|---|
| Phyllanthus Niruri. | Mimosa flexuosa. |
| Tragia involucrata. | Volkameria inermis. |
| Jasminum angustifolium. | Inula Indica. |
| Jasminum undulatum. | Calotropis gigantea. |
| Solanum trilobatum. | Periploca Indica or Sarsaparilla |
| Vitex Negundo. | Solanum Indicum. |
| Hyperanthera Moringa. | Alpinia Galanga Major. |
| Gmelina Asiatica. | Bauhinia tomentosa. Nerium |
| Clerodendrum Phlomoides. | Antidysenterium. |
| Cratæva religiosa. | Medicinal Root used as a re- |
| Bignonia Chelonoides. | medy for Dysentery. |
| Cratæva Tapia. | Artificial Salt used as a pur- |
| Plumbago Zeylanica. | gative. |
| Solanum Jacquini. | Cyperus graminifolius. |
| Solanum Indicum. | Piper Longum. |
| Ocimum Basilicum. | Alpinia Galanga. |
| Mimosa Triquetra. | Tragia involucrata. |
| Zingiber Officinale. | Cassia Auriculata. |

7532 *Oils.*

| | |
|---|---|
| Ground Nut Oil. | Soap Nut Oil. |
| Cocoanut „ | Margosa „ |
| Castor „ | Northern Ghee. |
| Gingely „ | Honey. |
| Linseed „ | Lamp Oil. |

7533 *Grains.*

| | |
|---|---|
| Bengal Rice (2) | Millet. |
| Madras common Rice (4) | Paspalum frumentaceum. |
| „ Table Rice. | Papaver somniferum. |
| „ Rice used by lower orders of the people (2) | Maize (2) |
| | Dolichos Catiang (2) |
| „ Rice used as a luxury among Mahommedans. | Dolichos Tetraspermus. |
| | Green Gram (2) |
| „ Rice used as a luxury among Hindus. | Cytisus. |
| | Mace. |
| Paddy different kinds (5) | Bengal Gram. |
| Bangalore wheat. | Phaseolus radiatus. |
| Bengal wheat. | Peas. |
| Raggy. | Horse Gram. |
| Holcus Spicatus. | |

7534 *Seeds &c.*

| | |
|---|---|
| Gingely Seeds. | Cumin. |
| Lamp oil „ | Fenugreek. |
| Castor oil „ | Mustard. |
| Coriander „ | Long Pepper. |
| Anjona (Portuguese name). | Cloves. |
| Common Pepper. | Cardamoms. |
| Dry Ginger. | Cubebs. |
| Ground Nuts. (2) | Linseed. |
| Turmeric. (3) | Gallnut (3) |
| Anise Seed. | Compound of Terra Japonica |
| Cucumber Seeds. | with different spices. |

The Madras School of Industrial Arts, Exhibitors.

| | | |
|---|---|---|
| 7535 | Common bricks, 1st Quality. | |
| 7536 | do. 2nd „ | |
| 7537 | do. 3rd „ | |
| 7538 | Long Bricks. | |
| 7539 | Kick „ | |
| 7540 | Clapped „ | |
| 7541 | Facing „ | |
| 7542 | Dipped Facing „ | |
| 7543 | Prince Albert's hollow „ | |
| 7544 | Ornamental verandah „ | |
| 7545 | Partition wall „ | |
| 7546 | Large building „ | 16 inches 8 by 4 |
| 7547 | Glazed building „ | |
| 7548 | do large „ | |
| 7549 | Hollow Pillar „ | Lt. Puckle's muster. |
| 7557 | Circle and well „ | |
| 7551 | Arch „ | |
| 7552 | Key „ | |
| 7553 | Large key „ | |
| 7554 | Small paving Tiles | |
| 7555 | Medium sized paving „ | |
| 7556 | Large Paving „ | |
| 7557 | Glazed Paving „ | |
| 7558 | Glazed Verandah „ | |
| 7559 | Quarries of Fire Clay | |
| 7560 | Quarries plain and of Fire Clay | |
| 7561 | Inlaid encaustic Tiles | |
| 7562 | Glazed encaustic „ | |
| 7563 | Ornamental Verandah „ | |
| 7564 | Cornice and Balustrade „ | |
| 7565 | Roofing „ | |
| 7566 | Italian Roofing „ | |
| 7567 | Hollow roofing „ | |
| 7568 | Wedge shaped Roofing „ | |
| 7569 | Glazed roofing „ | |
| 7570 | Godown roofing „ | |
| 7571 | Water pipes of 2 qualities and sizes | |
| 7572 | Glazed water pipes | |
| 7573 | Knee, elbow and joint pipes | |
| 7574 | Fire Bricks 1st quality for Potter's furnaces | |
| 7575 | 2nd quality for Iron Puddling do. | |
| 7576 | Fire bricks for Reverberatory do. | |
| 7577 | Do. for Coke furnaces | |
| 7578 | Do. for Sugar boilers do. | |
| 7579 | Do. for Bakers' ovens | |
| 7580 | Crucibles of 3 sizes for melting brass, Bell-metal &c. | |
| 7581 | Spinning Jenny for making string | |
| 7582 | Hackle for cleaning Fibres | |
| 7583 | Do. do. | |
| 7584 | Model of a Copper Plate printing Press | |
| 7585 | Stand for Exhibiting Casts | |
| 7586 | Series of 69 Architectural Engravings | |
| 7587 | Frame contg. wood engravings. | |
| 7588 | Do. copper plate etchings. | |
| 7589 | Do. copper plate engravings. | |
| 7590 | Do. water color drawings. | |
| 7591 | Do. do. do. | |

7592 Do. do. of Insects caught in the seas on board the Gloriana, originals drawn by Mr. Toynbee.
7593 Do. do. of shells caught at sea by Dr. Trail.
7594 Do. do. of Insects caught at Cuddapah, drawn by A. Hunter.
7595 Screen with Photographs by Dr. A. J. Scott.
7596 Do. by Dr. J. Neill.
7597 16 Photographs in one Frame.

J. P. NASH, ESQ., M. D. EXHIBITOR.

*Collodion Positive Photographs.*

7598 Government House, Madras.
7599 Banqueting Hall, Madras.
7600 St. George's Cathedral, Madras.
7601 Chepauk Palace, Madras.
7602 Hindu Pagoda, Bangalore, Gopoorum.
7603 Do. do. do. Mundapum.
7604 Monument to the officers and Soldiers who fell at the battle of Bangalore.
7605 Fort of Bangalore.

LIEUT COL. C. A. DENISON, EXHIBITOR.

7606 Large chalk drawing.
7607 Do. do.
7608 Colored Photograph.
7609 *Do.*
7610 Crayon drawing.
7611 Water color drawing.

LIEUT. H. P. HAWKES, S. A. C. GENL; INVENTOR AND EXHIBITOR.

7612 Model of a proposed "Extempore Sick Cart."

This consists of the common bandy or Cart of the country with the simple addition of four circular springs, such as are used for stuffing the seats of chairs. These springs are placed at the four corners of any bandy at hand and being kept in their places by the four uprights which support the covering of every bandy require no fastening. In the top of these a hammock, mattress, piece of gunny or rough planking may be fixed and the sick cart is complete. The advantages of this contrivance are as follows:—(1) Its portability, the four springs being all that it is necessary to carry—these when properly tied would only occupy a space of an inch in depth by five or six inches in diameter, Five or six sets might be easily stowed away in each field medicine chest. (2) Its simplicity. No nails or fastenings of any sort being required. (3). Its adaptability to every situation where a common country cart is procurable.

7613 New muster revolving teapoy for Hospitals.

The disadvantages of the ordinary fixed teapoy for hospitals are numerous. The patient lying on his cot can only reach the articles lying on that side of his teapoy nearest to him, and that with difficulty from the great height above the cot of most teapoys. The advantages claimed for the present invention are as follow.

(1) Its greater convenience—A sick man being on his bed can by merely turning either of the shelves bring every article on the table within his reach.

(2) Its greater capacity—The two shelves presenting a much larger surface than the ordinary muster and from their different heights they can be used by the patient either in the upright or recumbent posture.

(3) Its portability—By unscrewing the nuts, the shelves take off for packing..

7614 Mill for distilling and rectifying spirit.

Constructed on the principle of the best English stills, but so simple that a native may make and work it with ease.

7615 Proposed plan of exhibiting wood in a Museum.

A specimen of wood of the ordinary size of the tree is roughly shaped into the form of a book, the two sides of which will show the vertical, whilst the top and bottom will exhibit the horizontal grain, and fibre of the wood. One side of the block may be polished to shew its adaptability for Cabinet work. The interior is hollowed out to contain specimen of the fruit, flower, and leaf of the tree, with any particulars regarding it, as well as for samples of the gum, oil, or other valuable substance which it may produce. These blocks being numbered and labelled on the back are placed like books in a book case and are always available for reference.

By choosing as the specimens slabs of wood of the size to which the tree usually attains and arranging them accordingly, the Mechanic may see at a glance the woods which will suit his purpose. Whereas, by cutting each specimen to the same measure as is usually done, no idea of the relative sizes of wood procurable can be formed.

7616 Portable self-adjusting iron wash stand.

The advantages of this modification over the old pattern are, its strength and portability and the ease with which it may be adjusted to suit any sized basin, by merely lifting up the soap tray below.

7617 Book on coins of Mysore published by Exhibitor.

MESSRS. GRIFFITHS AND CO., EXHIBITORS.

7618 French Glass Dessert Service with gilt tendril wreaths consisting of 2 Centres, 4 Comports, 30 Plates, 15 Custard glasses, 4 Cream bowls with covers and stand, 4 Preserve Dishes with covers and 2 Cake Plates.....Rs. 760 0
7619 English Egg shell Worcester Porcelain Tea Service, consisting of 10 Tea Cups and Saucers, 1 Slop bowl and 2 Bread plates..... 50 0
7620 Pair French Blue and gilt Glass Flower Vases No. 2, Richly enamelled 165 0
7621 Parian Statuette. "Venus" with glass cover on Rosewood stand (English.)... 56 0

| | | | |
|---|---|---|---|
| 7622 | Do. do. "Struggle 'or the Heart" with glass cover on Rosewood stand (do.) | 64 | 0 |
| 7623 | Vizagapatam Ivory Backgammon Board inlaid with sandal wood, with chess and Backgammon men complete. | 150 | 0 |
| 7624 | Do. Ivory writing Desk inlaid with Sandalwood,..... | 85 | 0 |
| 7625 | Bronze spring plate for letters(English) | 1 | 4 |
| 7626 | Microscope complete in case No. 617,..... do. | 100 | 0 |
| 7627 | Piece Long Cloth D. H,..... do. | 12 | 8 |
| 7628 | Do. No. 3,..... do. | 14 | 0 |
| 7629 | Do. No. 5,..... do. | 16 | 0 |
| 7630 | Do. No. 7,..... do. | 26 | 0 |
| 7631 | Piece of Jaconet No. 95,..... do. | 15 | 0 |
| 7632 | Cashmere Scarf richly worked at Delhi,..... | 75 | 0 |
| 7633 | Do. do,..... | 75 | 0 |
| 7634 | Do. do,..... | 75 | 0 |
| 7635 | Iron Portable folding Chair, (French.) | 12 | 0 |
| 7636 | Do. with arms..... do. | 27 | 8 |
| 7637 | Iron Portable folding Couch,... do. | 44 | 0 |
| 7638 | Maltese Stone vase on Pedestal richly carved,..... | 90 | 0 |
| 7639 | Do. do. ..... | 90 | 0 |

Miss M. Quicklee, Exhibitor.

| | | | |
|---|---|---|---|
| 7640 | Pair of Bead Work Bracelets,..... | 3 | 8 |
| 7641 | Do. do. do. do. ..... | 3 | 0 |
| 7642 | Bead work Bag,..... | 1 | 8 |
| 7643 | Do. do. ..... | 1 | 4 |
| 7644 | Crochet collar,..... | 1 | 0 |
| 7645 | Do. do, ..... | 1 | 8 |
| 7646 | Do. do, ..... | 0 | 12 |
| 7647 | Do. do, ..... | 0 | 8 |
| 7648 | Do. do, ..... | 0 | 12 |
| 7649 | Do. do, ..... | 1 | 0 |
| 7650 | Do. D'oyley,..... | 1 | 8 |
| 7651 | Do. Silk,..... | 0 | 6 |

Mr. J. Quicklee, Exhibitor.

| | | | |
|---|---|---|---|
| 7652 | Gutta Percha Tray from Singapore,.... | 3 | 8 |
| 7653 | Do. do. Bucket,..... | 2 | 8 |
| 7654 | Do. do. Jug,..... | 1 | 8 |

Dr. G. W. Flynn, Exhibitor.

*Alkaline Preparations.*

7655 *Potass* from Saltpetre & Charcoal.
7656 Carbonate of Potass.
7657 Bicarbonate of Potass.
7658 Acetate of Potass.
7659 Sulphate of Potass.
7660 *Soda* from Dhobey's earth.
7661 Carbonate of Soda.
7662 Sesquicarbonate of Soda.
7663 Acetate of Soda.
7664 Sulphate of Soda—refuse of the manufacture of Hydrochloric Acid.
7665 *Ammonia.*
7666 Sal-ammoniac purified from the Bazar article.
7667 Liqr. Ammoniæ.
7668 Carbonate of Ammonia.
7669 *Sal Volatil,* See spirituous preparations.
7670 Soaps, Plain and Toilet.

*Alkaline Earths.*

7671 Heavy Spar.
7672 Nitrate of Baryta.
7673 Muriate of Baryta.

*Alcoholic preparations from Juggery.*

7674 Country Arrack, 20 U. P.
7675 Alcohol, 60 O. P.
7676 Do. Absolute.
7677 Sweet spirits of nitre.
7678 Sulphuric Æther.
7679 Sal Volatile.

*Mercurial preparations.*

7680 Grey Powder.
7681 Blue Pill.
7682 Blue Ointment.
7683 Citrine Ointment.
7684 Protoiodide of Mercury.

*Opium preparations.*

7685 Muriate of Morphia.
7686 Acetate of Morphia.
7687 Liquor Opii Sedativa.

*Antimonial preparations from the Country Black Antimony.*

7688 Oxysulphuret of Antimony.
7689 Compound Antimonial Powder.

*Iron preparations.*

7690 Sesquioxide of Iron.
7691 Sulphate of Iron.

*Products from Wood.*

7692 Pyroligneous Acid.
7693 Glacial Acetic Acid.
7694 Pyroxylic spirit, or wood Naptha, Tar.

*From Country Vinegar.*

7695 Distilled Vinegar.
7696 Strong Acetic Acid.
7697 Glacial Acetic Acid.
7698 Nitric Acid from Saltpetre.
7699 Muriatic Acid from Common Salt.

*Photographic preparations.*

7700 Collodion Instantaneous.
7701 Nitrate of Silver Crystals,
7702 Sulphate of Iron.
7703 Transparent Varnish.
7704 Jet Varnish.

*Perfumery and Toilet Articles.*

7705 Brown Windsor Soap.
7706 Honey soap.

7709 Frangipani Soap.
7710 Palmine for Castor oil make a good grease.

Mr. Cleaves, Exhibitor.

*Photographic preparations.*

7711 Collodion ordinary.
7712 Iodizing solution.
7713 Absolute Alcohol.

7714 Sulphuric Æther.
7715 Nitric Acid.
7717 Glacial Acetic Acid.
7716 Gun Cotton.

*Perfumery and Toilet articles.*

7718 Indian Frangipani.
7719 Essence of violets.
7720 Eau de Cologne.
7721 Indian Patchouli.
7722 Jockey club.
7723 Cosmetic.
7724 Rose complexion powder.

MESSRS. OAKES & Co., EXHIBITORS.

*China Ware and Goods.*

7725 Work Box with carved Ivory fittings with Key, ... ... Rs. 40 0
7726 Carved Ivory Chessmen, ... 100 0
7727 „ „ Backgammon men, ... 32 0
7728 Backgammon Board and men, 30 0
7729 Piece of Grass cloth. 6 0
7730 „ „ ... ... 12 0
7731 „ „ ... ... 6 0
7732 „ „ ... ... 20 0
7733 „ „ ... ... ... 35 0
7734 „ „ ... ... 40 0
7735 „ „ ... ... ... 45 0
7736 „ „ ... ... 55 0
7737 „ „ ... ... ... 60 0
7738 2 Handsome and Unique Chinese Bronzes, on carved Stands, one represents the Signs of the Zodiac &c. 70 & 100 0
7739 Crape Shawl ... ... ... 85 0
7740 Silk Fan with raised Ivory Figures. 8 0
7741 Book of China rice paper drawing.... 25 0

*Long Cloths.*

7742 Piece of Long Cloth. ... ... 8 0
7743 „ „ ... 10 0
7744 „ „ ... ... 11 0
7745 „ „ ... 12 0
7746 „ „ ... ... 16 0

*Inlaid Papier Machie Ware.*

7747 Writing desk ... ... 25 0
7748 Work Box. ... ... ... 32 0
7749 Card Box. ... ... 20 0
7750 Envelope case... ... ... 9 8
7751 Writing Port Folio, .... ... 4 0
7752 Pen Tray ... ... ... 3 8

*Moderator Lamps.*

7753 Pair of China Gilt Pedestal Moderator Lamps complete, No. 186 Rs. 90 pair.
7754 „ „ „ „ „ 172 „ 90 „
7755 one „ „ „ „ 165 „ 35 each.
7756 „ „ „ „ „ 163 „ 35 „

*Skins.*

7757 Patent Calf Skin... ... ... 7 0
7758 Bronze and Black Kid, each 4 0
7759 White Mason's Kid, ... ... 5 0
7760 Purple Morocco, ... ... ... 8 0
7761 Green Roan. ... ... ... ... 4 0
7762 Chamois,... ... ... ... 1 4
7763 „ ... ... ... ... 0 12

*Shawls.*

7764 Rich wove Paisley Shawl 15 0
7765 „ „ Superfine 35 0
7766 „ Paisley Long Shawl, 45 0
7767 „ Satin Stripe Silk Barege do. 20 0
7768 „ Printed Cashmere Shawl, 14 0
7769 „ "Hunting Stuart" Long Shawl, 21 0
7770 „ Tartan Wool Square Shawl, 9 0

*Brushes.*

| | | R. | A. |
|---|---|---|---|
| 7771 | Pair of Ladies Tortoise shell highly finished Hair Brushes,..... pair | 14 | 0 |
| 7772 | Do. Ivory „ „ each | 23 | 0 |
| 7773 | Do. „ „ „ „ | 19 | 0 |
| 7774 | Pair of Trichosaron Hair Brushes, pair | 7 | 0 |
| 7775 | Gentlemen's Superior „ ..... | 8 | 8 |
| 7776 | „ „ „ „ .. ... | 4 | 0 |
| 7777 | Billiard Table Brush, ..... | 5 | 0 |
| 7778 | Chimney or Lamp „ ..... | 1 | 0 |
| 7779 | Scrubbing „ ..... | 1 | 12 |
| 7780 | Broomheads „ ..... | 2 | 0 |
| 7781 | Turksheads „ ..... | 4 | 0 |
| 7782 | Banister „ ..... | 2 | 0 |
| 7783 | Flat Masons „ ..... | 2 | 4 |
| 7784 | Horse Brush,..... | 3 | 8 |
| 7785 | „ „ ..... | 4 | 8 |
| 7786 | Water „ ..... | 3 | 8 |
| 7787 | Spoke „ ..... | 3 | 8 |

*Wicker Baskets.*

7788 19 Specimens of White and Painted Wicker Baskets of Sizes from 6 Annas to ..... 3 8

*Electro Plated Vases.*

7789 Electro Plated Bulb Vase,..... 5 0
7790 „ „ „ „ ..... 10 0

*"Asphalte."*

7791 2 Specimens of Asphalte prepared by Thomas Harrison, Cambridge Heath Wharf, Hackney, London.

Asphalte is now extensively used in England to resist damp, and where it has been employed in Mauritius, Ceylon, and parts of India, it is found to answer admirably, being impervious to wet, white ants, or vermin, and does not admit of any kind of vegetation *(so destructive to buildings in India)*, rot or decay.

A ton of Asphalte will cover 360 square feet one inch thick, or in proportion of greater or lesser thickness; and be fit for traffic one hour after being laid down.

The mode of laying Asphalte is simple and most expeditious for Arches, Brick work, Footways, Tanks, Flat Roofing, &c. Break in pieces,—and with the addition of threefourths, or equal its weight of gravel or sand mixed in whilst boiling,—spread half an inch to one and a half inch thick, according as the traffic, &c., is light or heavy, and apply in one or two coatings; the second sprinkle with *fine* sand

and lightly brush over, *whilst warm*, after which smooth with a cementing trowel, or flat piece of wood.

For dressing "Asphalte Felt" *without* the admixture of gravel or sand, and put on in a boiling state, one eighth of an inch thick with a brush.

Tools required are merely a Wooden Beater to prepare the ground, an Iron Boiler and Ladle, a Bricklayer's Iron Trowel, and a Plasterer's Wooden Cementing Trowel—the latter for levelling and smoothing the surface whilst warm—but so easy is Asphalte of application, that some of these even may be dispensed with, if a little ingenuity is exercised.

MR. J. DESCHAMPS, EXHIBITOR.

*Carved Work in Indian Rose wood, manufactured by Exhibitor.*

7792 Ladies' Book Case, perforated pannels, inside with Satin wood.
7793 Pier Glass, with Birds, Reptiles, fruits and flowers of India.
7794 Flower stand, with fruits and flowers of India.
7795 Do. large, with do. do.
7796 Ladies' Devonport with do. do.
7797 "Armoire-a-Glace" combining a Lady's Wardrobe and a Cheval glass.
7798 Arm Chair with figures of Children, Eagle and flowers.
7799 2 Corner Cabinets.
7800 Sofa with fancy Rattan seat and Back.
7801 2 Drawing room Arm Chairs with fancy Rattan seat and Back.
7802 2 Hall Chairs, Rattan seats.
7803 Carved Bracket, "Chimera."
7804 Do. Bracket, "Rocaille."
7805 Dressing Table, Pompadour Style.
7806 6 Mountings for Photographs on French and English Frames.

*Carved work in Mahogany manufactured by "Balny," Paris.*

7807 Carved. Drawing-room Sofa, with figures and flowers, style "Rocaillee."
7808 Do. Candelabra, with figure of cupid half life size, same style.
7809 Do. Arm Chair, Louis XV. style.
7810 Do. Pier Table, Louis XV. Style, in Mahogany, manufactured by Exhibitor.
7811 Rosace 5½ feet in diameter made of colored glass, manufactured by Exhibitor, the glass French.
7812 Specimen of Cayabooka wood, from Straits of Malacca.
7813 Do. of knotted Cayabooka wood do. do.

*Sevres Manufacture.*

7814 Plates, Porcelain, for Cabinet Pannels with painted birds and flowers.
7815 Porcelain Jardiniere, painted with Bouquets.

*French Manufacture.*

7816 Porcelain Plate with a painting of Clorinda.
7817 2 Do. with Historical subjects.
7818 6 Do. Ice Plates, gilt.
7819 6 Specimens of Tiles.
7820 Group of the three Graces in Alabaster, by Canova.

*Italian Sculpture.*

7821 Group figures with Taza in Alabaster.
7922 Alabaster Vase with imitation fruits.
7823 2 Alabaster Statuettes, "Genie and Baigneuse."
7824 2 Statuary Marble Busts, "Bacchus and Arianne," large size.
7825 8 Slabs, Specimen of Marbles, from various parts of Europe and China.
7826 2 Bronze Statuettes by Pradier.
7827 The Boar Vase, Bronze from *Tahan*, Paris.
7828 Egyptian Cup do. do. do.
7829 Cup with child & dog. do. do. do.
7830 4 Cast Iron Porte-manteau, Cariatides, French manufacture.
7831 2 Do. New Wheel-guard, for Porticoes and Porte-Cocheres do.
7832 Iron "Espagnolette." The improved mode of fastening doors. French.
7833 Do. "Cremone" Do do. do,
7834 12 Engravings in frames by the first Artists in France.
7835 2 Engravings, Victoria and Albert, in Color, by Winter Halter.
7836 Imitation Cornaline Casket from Tahan, Paris.
7837 Mother O'Pearl, do. do. do.
7838 Basket Tortoise shell, do. do.
7839 Table Ornaments, Opal Mother O'Pearl, Alabaster and Brass gilt, do. do.
7840 Set of Glue pieces and plates engraved for Book Binders, French manufacture.

MAJOR P. T. SNOW, EXHIBITOR.

7841 Articles made of Gutta Percha comprising Inkstands, Pen Trays, Brackets, Brush and Soap trays card Baskets.—Rs. 24

W. J. ADDIS, ESQ. EXECUTIVE ENGINEER CHITTLEDROOG DIVISION, MYSORE, EXHIBITOR.

7842 Model of brick making machine.

*Directions.*

Clay to be deposited into frame work marked A A A A, when the lead roller B should be drawn through Pulley C, after which the set of knives marked D will follow and cut the Bricks the required breadths, when the 2d set of knives marked E passing through pullies will cut the bricks the required length, when a cooly or coolies be employed to lift the pallets boards F from underneath the frame work A A A A.

7843 Model of Sugar cane mill.
7844 Do. Oven.

EDWARD LECOT, ESQ., EXHIBITOR.

7845 Oriental uncut ruby, Rs. 500.

CAPTAIN R. W. D. NICKLE, 30TH N. I., EXHIBITOR.

*Pen and ink drawings.*

7846 Tank of the Ascetics at Bhovanesswar.
7847 Temple of the Sun at Kanarac.

MESSRS. G. SCRIVEN & Co, EXHIBITORS.

*Electro plate articles.* RS.

7848 Engraved tea pot,..... 40
7849 2 Toasting forks on Deer handles, each,... 6
7850 2 Children's mugs, do. ..... 15
7851 Claret jug,..... 50
7852 Byson horn Flower holder,..... 70
7853 Child's Electro gilt mug,..... 15
7854 Pair Replated table pedestals,..... 16

MESSRS. FALLON, NICHOLAS & Co., EXHIBITORS.

7855 Frame of Photographs,
7856 Do. Do.
7857 Portrait in oil.

MRS. LASERON, WOODCOTE COONOOR, EXHIBITOR.

7858 Basinette Cover.
7859 Pair Slippers.
7860 6 Caps embroidered on white.
7861 Cap with Tassel embroidered on Satin.

These are specimens of Needle work done under the superintendence of Mrs. Laseron by the Jewesses of Cochin on the Malabar Coast. The patterns are drawn by the Jewesses with great rapidity without any copy, they require only a pencil, ruler, and pair of compasses.

CAPTAIN G. STAPLE DOBBIE, ASST. CIVIL ENGINEER DOWLAISHWERAM, EXHIBITOR.

7862 Model of a Paddle Boat built for the Godavery Delta Mission, in the Government Dock yard at Dowlaishweram.

The Boat can be propelled with 3, 4, 5 or 6 men, according to speed required. It was built with the intention of employing 4 men, with whom, 20 revolutions per minute can be obtained, which gives, after deducting slip, a moderate speed. In building the Boat, the comfort and accommodation of the Missionary has alone been thought of and not speed. Mr. E. Towle superintended the building of the Boat.

W. E. UNDERWOOD, ESQ., EXHIBITOR.

7863 Silver Bracelet with stones.
7864 Do, do.
7865 Brooch do.
7866 Electro Plated flower vase.
7867 Bugle.
7868 Lady's Portrait in oil.
7869 Water color Landscape.
7870 Piece Pine apple cloth 10 yards.
7871 Do. Marool Fibre do. do.
7872 Do. Yercum do.
7873 Sandal Wood Box. } Madras made.
7874 Paper Weights. }
7875 Woollen and gold shawl, Madras manufacture.
7876 Photographs.
7877 Eloopoo oil for salad.
7878 Various oils.

JUGGENADA BUTTEN, EXHIBITOR.

7879 15 Gold rings set with precious stones.
7880 2 pairs Bangles, gold, do. do.
7881 2 Breast pins do. do. do.

W. DOWDESWELL, ESQ., EXHIBITOR.

7882 One large Acoustic instrument with flexible tube and ear piece.

THE HON. WALTER ELLIOT, ESQ., EXHIBITOR.

BURMESE ARTICLES.

*Pottery Glazed.*

7883 2 Large dishes.
7884 2 Water coolers.
7885 2 Lamps.
7886 2 Do.
7887 Small ditto.
7888 5 Hanging Lamps.
7889 Small Cup.
7890 Water spout.
7891 2 Glazed tiles of ancient origin from Tonghoo.

*Miscellaneous.*

7892 A terra cotta representation of Buddha in relief.
7893 2 Do. do. do. gilt and presented as offerings in temples. Hundreds and thousands of these are found in every sacred place.
7894 Brass reliquary in the form of a *Paha* or *Dehgope*. It was taken out of an actual *Paha* at Tonghoo removed by the sappers in clearing the cantonment and contained some reliques in the cavity at the top which was made to open for the purpose of receiving them.
7895 Burmese Gong.
7896 Five Burmese combs.
7897 Pair of Burmese sandals.
7898 Burmese Mirror.
7899 Pair of Burmese Ear-rings of horn.
7900 Do. do. do of wood.
7901 Do. do. do. of do. yellow. laquered and opening so as to form a box.
7902 Do. do. do. of glass.
7903 Do. do. do. of amber.
7904 Set of Burmese scales and weights, of 20, 10, 5, 1, ½ and ¼ Ticals.
7905 3 Burmese memorandum books of cloth or paste board smeared with black, on which accounts &c. are written with a pencil of steatite or *balapam*—like the *cadattams* of Canara.
7906 Balapam pencils.
7907 Two Burmese toys—dancing figures.

*(The people are very fond of such playthings. English toys find a ready sale.)*

7908 Two Do. do.
7909 Two Do. do. Horses.
7910 A common Dha or woodman's bill.
7911 A do. woodman's bag.
7912 A pair of Burmese tweezers.

*Raw Products.*

7913 Material used in glazing the pottery, said to be the slag of silver ore, obtained from Ava.

7914 A sort of resin called *Poon-yet (poi-yin-yet)* found in the ground and supposed to be produced by some hymenopterous insect.

*(It is used by the Burmese for caulking boats, and by Europeans for stopping cracks in pucka roofs, for which it answers admirably. It becomes soft and plastic in hotwater and is then mixed with petroleum to the proper consistency and applied.*

7915 The same which has been worked up in hot water, and cleaned with the hand preparatory to adding petroleum.

7916 Specimen of Tin ore with quartz and pyrites from the Tavoy Hills.

*Articles brought by the Shans from their own country for sale at Moalmain.*

7917 Lacquered box, *(This does not differ from the Burmese boxes).*

7918 The same before the lacquer is applied.

7919 Two Shan pipes. These are used by the common people, a piece of bamboo being stuck in for a tube.

7920 Shan Ink.

7921 Shan Comb.

7922 Shan powder flask.

7923 Shan bullet pouches.

7924 Shan Silk.

7925 Chinese dice with a handle of counters.

7926 Hard, compact, fossiliferous limestone containing shells. (Oldham's Report p. 34.)

*From the Farm caves near Moalmain.)*

7927 Land, Creek, and Fresh water shells.

7928 Collection of coins of Southern India, and other antiques.

MR. H. SMITH, GOVERNMENT PRESS, EXHIBITOR.

7929 Job printing Machine (Foolscap) Invented by Colonel Hoe of New York.

This Press is capable of throwing off 2,500 impressions per hour with ease, or more, if the feed-boy can supply the sheets. The manner of running the bed is entirely original and is done by means of a crank and lever, which gives it a slow and uniform motion while the impression is being taken, but a quick retrogade movement,—thus combining the advantages of a slow impression with speed. Another new feature of this Press is, that the sheet-flyer is so arranged that no tapes pass round the impression Cylinder, so that whatever sized form is worked there are neither tapes nor fingers to shift. It has also an adjustable knife to the fountain, bearers for the Bed, patent feed-guides, &c. &c.

7930 A Ready Proof Press consisting of a cast-iron table (or bed) and railway, supported by a cast-iron frame in which there is a closet to contain wet paper and the inking roller. The impression is taken by a solid cast-iron Cylinder with flanges at each end to prevent it from running off the tracks.

CAPTAIN NEWLYN, D. A. C. GENL., EXHIBITOR.

7931 Burmese Bell on Stand Rs. 400 0

7932 Burmese Bell on Stand. Rs. 200 0

7933 Two Burmese Alabaster figures,

7934 Two Shan Boxes,

7935 Complete set of Burmese weights.

7936 Burmese fire stick.

7937 Burmese Poonghee Boxes.

7938 Joint of a Bamboo.

*Surgical Instruments.*

| | | | |
|---|---|---|---|
| 7939 | Crooked Scissors. | Rs. | 4 0 |
| 7940 | Saw. | ,, | 8 0 |
| 7941 | Artery forceps. | ,, | 1 12 |
| 7942 | Dressing ,, | ,, | 2 8 |
| 7943 | Scalpule. | ,, | 3 0 |
| 7944 | Bistory. | ,, | 2 4 |

C. STREENAVASOOLOO NAIDOO, EXHIBITOR.

7945 Ivory Chessmen with wooden box (and a key) 32 in number.

7946 Wooden Rose water sprinkler.

7947 Two Gilt Toys Male and Female.

7948 Small Cot made of Tin and Glass with workmanship.

7949 Two Wooden Painted Toys.

7950 Small Towel of Chintz.

7951 ,, Model of Palanquin made of Beads.

7952 ,, ,, Rose Water sprinkler made of Iron-wire and beads.

7953 ,, ,, ,, made of Wood and beads.

7954 ,, box made of Beads and Wood.

7955 ,, Basket of Straw, embroidered with beads,

7956 2 Bracelet made of Beads.

7957 Model of Cutcherry Desk made of Tin.

C. BAULLO MOODELLIAR, EXHIBITOR.

7958 Essential Oil of Orange Annas 12 per oz.

7959 Pure Muriatic acid, Rs. 1¼ per lb.

7960 Dry carbonate of Soda, prepared from Dhobie's earth, Annas 4 per lb.

7961 Crystals of carbonate of Soda, prepared from last mentioned.

7962 Crystallized carbonate of Soda prepared from Dhobie's earth.

7963 Marine Soap, Annas 8 per lb.

7964 Illupie oil Soap made with the above refined Soda, Annas 6 per lb.

7965 Curd Soap, Annas 10 per lb.

7966 Scented Soap, Annas 4 per cake.

7967 Transparent Soap.

NARAYEN DAJEE, GRADUATE OF THE GRANT MEDICAL COLLEGE, EXHIBITOR.

*Photographs prepared by Exhibitor.*

7968 Parsee Lady.

7969 Do. do.

7970 Native Turner.

7971 View of St. Thomas's Cathedral.

7972 Native School Girl.

7973 Portrait of Hemabhoy Pemabhoy.

7974 Dr. Narayon Dajee.

7975 Dr. Bhawoo Dajee.

7976 Bibijee's Musjid Roza, erected over the tombs of the wives of Sultan Koolbe Alum Gujerat—Broach Cart for goods—Hindoo Temple of Swami Narayen.

7977 View of the Grant Medical College from a waxed paper negative.

7978 Front of view of Shaha Alum—view of the Jumah Musjid three gates of Ahmedabad—side view of Koolbe Alum's wives Roza.

7979 View of the Grant Medical College painted —taken by the honey process.

7980 View of the Esplanade.
7981 View of a Hindoo Temple near Bhyculla.
7982 View of St. Thomas's Cathedral.
7983 View of the three gates of the Fort and Esplanade.
7984 Parsee Lady—a Parsee girl—a Parsee girl.
7985 Gujerat Ryots Horn Cultivators—A Rajpoot grassia—three images in a temple at Pulitana.
7986 View of St. Thomas's Cathedral and the Bombay green.

H. Tolputt, Esq., Exhibitor.

*Sugar.*

7987 Lump Sugar powdered, the produce of the Palmanair District.
7988 Raw Sugar, produce of the Chittoor District. 1st quality.
7989 „ „ 2nd „
7990 „ „ 3rd „
7991 „ „ 4th „
7992 „ produce of Timery North Arcot.

*Cotton.*

7993 Guntoor—ordinary quality.
7994 Nellore Best „
7995 „ Good average „
7996 „ Ordinary „
7997 „ Inferior „
7998 Bellary Good average „
7999 „ Ordinary,
8000 „ Inferior.

John Tawse, Esq., Exhibitor.

8436 Kurpah Indigo.
8437 Dryleaf do.
8438 Nux Vomica.
8439 Niger Seeds.
8440 Mustard or Rape Seed.
8441 Gingely or Teel Seed.
8442 Collodion portrait of a native.
8443 do. View of Chetput Pagoda.
8444 do. Portrait of Vencatasawmy Naidoo.

C. V. Conniah Chettiar, Exhibitor.

8445 Models of Paper Mills at Paralore belonging to Exhibitor.
8446 Do. Beating Engine.
8447 Do. Ream Cutting Press.
8448 Do. Glazing Machine.
8449 Steam Engine, one horse power.

Mr. B. Ross, Exhibitor.

8450 French Ornamental & Musical Clock Rs. 110.

*This clock strikes hours & half-hours. The pendulum swings a sailor boy.*

Messrs Thomas Crowe and Son, Manufacturers, Vepery Tannery Madras, Exhibitors.

| | | |
|---|---|---|
| 8451 | Summerset Saddle and Bridle complete, | 60 0 |
| 8452 | Set of Brown Harness with plated mountings, | 70 0 |
| 8453 | Do. do. Black, | 70 0 |
| 8454 | Pair of Gold embroidered Gent's bedroom Slippers, | 35 0 |
| 8455 | Pair of Gold embroidered Lady's Bengal Muster Slippers, | 25 0 |
| 8456 | Pair of Opera Boots, | 15 0 |
| 8457 | Pair of Top Boots, | 21 0 |
| 8458 | Pair of Calf Skin Oxonian Shoes, | 3 0 |
| 8459 | Pair of Bluchers, | 4 8 |
| 8560 | Pair of Lady's white Satin Shoes, | 4 0 |
| 8561 | Pair of Lady's Prunella Buskins with elastic sides, | 5 0 |
| 8562 | Pair of Boy's Calf skin Oxonians, | 1 8 |
| 8563 | Pair of Boy's side-laced Boots, | 2 8 |
| | The above articles are made from leather tanned in the premises of the Exhibitors, the skins, tan, and every thing about the leather being Indian. | |
| 8564 | Blue Morroco skin, | 1 8 |
| 8565 | Red Morroco do. | 1 8 |
| 8566 | Shamois or wash leather, | 1 0 |
| 8467 | White Kid skin, | 1 0 |

Mr. G. Williams, Exhibitor.

8468 Model of a floating breakwater.

*The Model is set in a zinc trough with water to represent a sort of sea and be agitated by means of triangular Cylinders worked by cog-wheels immersed in the trough, the floating battery being composed of bales of Bamboo strapped with iron (practical dimensions 15 feet long by 6 feet diameter) model scale, being ½ inch to the foot, having* three *binding straps and* one *length rod; linked end ways as well as side, to form one continuous wall as if from Royapooram at one end to front of Custom House and saluting battery to front of Messrs. Parry's, beyond the third surf at an angle of about* 30° *ranging according to depth twenty feet from bed of sea and moored by anchors at stated distances.*

N. C. Mooragasem Moodelliar, Exhibitor.

8469 Stone cup.
8470 Do. Tumbler.
8471 Do. Snuff-box.
8472 Do. do.

QUARTER MASTER SERJEANT THOMAS TAYLOR, EXHIBITOR.

8473 Military Saddle and Bridle complete.

*The above manufactured of country materials and by country workmen.*

THE RIGHT HON. LORD HARRIS, EXHIBITOR,

*Arms.*

8474 Blade of Konasummunder.
8475 do. do.
8476 Carnatic Matchlock with wooden ramrod and a bag of rope match.
8477 Carnatic Matchlock with steel ramrod.
8478 do. do. do.
8479 Straight Sword in broad Goopthee handle—silver gilt, and red velvet scabbard.
8480 Broad Sword in Goopthee handle and yellow velvet scabbard.
8481 „ „ in purple velvet scabbard.
8482 Native Bayonet.
8483 Straight Sword in gilt handle and red velvet scabbard.
8484 do. do. in yellow velvet scabbard.
8485 Spear, handle inlaid with silver, and red velvet scabbard with silk tassels.
8486 Saw Sword, handle gold gilt in leather scabbard,
8487 Broad tapering Sword, handle gold gilt, in leather scabbard.
8488 Sword handle inlaid with gold, in green velvet scabbard.
8489 do. do. do. do.
8490 do. do. in purple velvet scabbard.
8491 do. in silver gilt handle, and red velvet scabbard.
8492 Sword, gold gilt handle in the shape of an elephant's head and trunk, in blue velvet scabbard.
8493 Battle axe, handle gold gilt.
8494 Battle axe, wooden handle, inlaid and covered with silver.
8495 Shield with lace worked strap.
8496 Dagger, handle gold gilt, in leather sheath.
8497 Dagger, handle inlaid with gold, in yellow velvet sheath.
8498 Dagger, handle silver gilt, in red velvet sheath.
8499 Double dagger in red velvet sheath.
8500 Peishcubz, or waist dagger, green ivory handle, in purple velvet sheath.
8501 Peishcubz, gold gilt handle, green velvet sheath.
8502 Poignard, or Beechma, in ivory handle, with silver tassels and red ivory sheath.
8503 Poignard or Beechma in ivory without tassels.
8504 Poignard or Beechma in ivory silver gilt.
8505 Knife in ivory handle and silver sheath.
8506 Sword, handle inlaid with gold, in leather scabbard.
8507 Sword, in ivory handle without scabbard.
8508 Small sword, in emerald handle, in yellow velvet sheath.
8509 Goopthee Sota.
8510 Steel Sota, with a pronged head attached to a Chain.
8511 Tubber containing the Axe, spear and song or spear head with a turn screw knife underneath, handle gold and silver gilt.
8512 Do. do. in red velvet sheath.
8513 Song or spear head on steel handle.
8514 Steel Sota.
8515 Tubber knife, handle silver gilt in yellow velvet sheath.
8516 Tubber with steel head handle silver gilt.
8517 Dagger handle inlaid with gold in red velvet sheath.
8518 Poignard or Beechma, handle inlaid with gold, in red velvet sheath.
8519 Peishcubz in red ivory handle and red velvet sheath.
8520 Peishcubz in red ivory handle, and yellow velvet sheath.
8521 Dagger, in broad steel handle and leather sheath.
8522 Dagger, in red velvet sheath.
8523 Dagger, in broad handle, silver gilt and yellow velvet sheath.
8524 Coorg knife in red velvet sheath.
8525 Chond Sorriz, Sun and Moon.
8526 Simotha or Nut Cracker containing a dagger.
8527 Pair of shoulder flaps lace worked, forming part of a suit of Armour.
8528 Helmet *with feathers.*
8529 Covering for the Chest.
8530 Covering for the Back.
8531 Waist belt, lace worked.
8532 Pair of aprons.
8533 Pair of aprons.
8534 Shield with lace worked strap.
8535 Broad Sword in yellow velvet scabbard.
8536 Large Peishcubz, handle worked in gold in purple velvet sheath.
8537 Arab Ghurry.
8538 Iron bit.
8539 Pair of coverings for the hands.
8540 Large sandalwood box.
8541 Sandalwood box.
8542 Sandalwood glove box.
8543 3 Sandalwood paper cutters.
8544 2 Sandalwood *card cases.*
8545 Blackwood box.
8546 Cabinet of Minatures from Delhi.
8547 Toy Elephant on Wheels.

F. Appavoo, Botanical Assistant Medical College, Exhibitor.

8548 *Dye stuffs.*

| No. | Natural Order. | Botanical Names. | English Names. | Tamil Names. | Teloogoo Names. | Hindoostanee Names. | Prices. Per. | R. | A. | P. | Where procured. | REMARKS. |
|---|---|---|---|---|---|---|---|---|---|---|---|---|
| 1 | Leguminosæ. | Butea frondosa. | Palas flowers. | Pôrasum poo. | Móduga. | Palás. | viss. | ... | 2 | .. | Madras. | Dye yellow with Alum: a little alkali added changes it to a deep reddish orange. |
| 2 | Rubiaceæ. | Morinda Citrifolia. | ..... | Noona-wer. | Móllooghoodoo | ..... | viss. | ... | 4 | ... | Do. | Dye red with Alum, color not bright, but permanent. |
| 3 | Compositæ. | Carthamus tinctorius. | Safflower. | Sendoorkum poo. | Koosumba. | Koosum. | viss. | ... | 1 | ... | Bellary. | Dyes pink and scarlet. |
| 4 | Cedrelaceæ | Cedrela toona. | ..... | Maylapoo. | ..... | ..... | viss. | ... | 10 | 8 | Salem. | Dye yellow with Alum. |
| 5 | Guttiferæ. | Garcinia pictoria. | Gamboge. | Mukki. | Passapoovennay. | ..... | viss. | 3 | 8 | ... | Mysore. | Dye yellow. |
| 6 | Leguminosæ. | Hæmatoxylon campechianum. | Logwood. | ..... | ..... | ..... | ... | ... | ... | ... | Madras. | Dyes red with alkalies, and black with Salts of Iron. |
| 7 | Rubiaceæ. | Rubia Munjista. | ..... | Munjisth wer. | Munjistee. | Munjit. | viss. | 1 | 6 | ... | Do. | Dyes pink, lake, purple, orange, yellow and brown. |
| 8 | Moraceæ. | Maclura tinctoria. | Fustick wood. | ..... | ..... | ..... | ... | ... | ... | ... | Do. | Dyes yellow, olive and brown. |
| 9 | Leguminosæ. | Pterocarpus Santalinus. | Red sandalwood. | Ségápooshámdánum. | Kuchandanum | Ruckut chundum. | viss. | ... | 4 | ... | Naggery Hills. | Dye red with Alum. |
| 10 | Do. | Cœsalpinia Sappan. | Sappan wood. | Varthengee cuttay. | Bukkum. | Bukkum. | viss. | ... | 3 | ... | Salem. | Dyes red with alum, and dark brown with Iron, not permanent. |
| 11 | Do. | Cassia tora. | Oval leaved Cassia. | Tagaray veray. | Tantim. | Chakunda. | viss. | .. | 8 | ... | Madras. | Dye blue, used with Pala Indigo in preparing a blue dye. |
| 12 | Euphorbiaceæ. | Rottlera tinctoria. | ..... | ..... | Cuplarung. | ..... | ... | ... | . | ... | Bellary. | Dust of the berries dye a pale orange, without a mordant. |
| 13 | Zingiberaceæ. | Curcuma longa. | Turmeric. | Munjil. | Passapoo. | Huldie. | viss. | ... | 8 | ... | Madras. | Dye deep yellow without a mordant, but not permanent. |
| 14 | Xanthoxylaceæ. | Toddalia aculeata. | Prickly Toddalia. | Molakarunnay. | Conda cashinda. | ..... | viss. | ... | 4 | . | Do. | . |
| 15 | Combretaceæ. | Terminalia chebula. | Myrobolan. | Kadukai. | Cárakaia. | Hara. | viss. | ... | 1 | 3 | Do. | Dye yellow with alum and a black colour with Salts of Iron. |
| 16 | Rubiaceæ. | Oldenlandia umbellata. | Chayroot. | Saya or Emboorel wer. | Tsheri-velloo. | ..... | viss | ... | 12 | ... | Madura. | Dyes red, orange and purple. |
| 17 | Melastomaceæ. | Memecylon tinctorium. | ..... | Casau elley. | Aliakoo. | ..... | viss. | ... | 1 | .. | Madras. | Dye yellow. |
| 18 | Flacourtiaceæ. | Bixa orellana. | Anatto. | Jabra veray. | ..... | ..... | viss. | ... | 8 | ... | Do. | Dyes orange, citron, green and yellow, colours not permanent. |
| 19 | Leguminosæ. | Indigofera tinctoria | Indigo. | Averie neelum. | Neelie. | Neel. | viss. | 3 | 14 | 6 | Cuddapah. | Dyes blue with alum, green with turmeric and black with Iron. |
| 20 | Apocynaceæ. | Wrightia tinctoria. | Pala Indigo. | Pala neelum. | Pala Neelie. | ..... | viss. | 5 | . | ... | Salem. | Dyes blue, green, purple & black. |
| 21 | Rhamnaceæ. | Ventilago ? | ..... | Pupley chuckay. | ..... | ..... | viss. | 1 | 2 | 8 | Do. | Dye red with alum. |
| 22 | Terebinthaceæ. | Semecarpus anacardium. | Marking Nut. | Shayrang côttay. | Nellajiedie. | Bheela. | viss. | ... | 2 | ... | Madras. | Dye black, the colour improved & prevented from running by a mixture of a little quick lime & water. |
| 23 | ..... | Lichen. | ..... | Kull pashie. | Ratipauchie. | Puttír ka pool. | viss. | .. | 8 | ... | Nellore. | |
| 24 | ..... | Lacca. | Lac. | Komb urrúk. | Commolékka. | Lákh. | viss. | .. | 6 | .. | Madras. | Dye red. |

Madras, 15*th January* 1857.

MADRAS.

| No. | Natural Order. | Botanical Names. | English Names. | Tamil Names. | Teloogoo Names. | Hindoostanee Names. | Where procured. | Remarks. |
|---|---|---|---|---|---|---|---|---|
| 1 | Cedrelaceæ. | Chloroxylon Swietenia. | Satin wood tree. | | | | | |
| 2 | Malvaceæ. | Hiliscus rosa sinensis. | Shoe flower Plant. | Sapatoo cheddie. | Dasanie. | Jasoon. | Madras. | |
| 3 | Jasminaceæ. | Nyctanthes arbor tristis. | Night flowering Jasmine. | Pagala mullee poo. | | Ursingah. | Madras. | |
| 4 | Leguminosæ. | Butea frondosa. | Pulas. | Porasum poo. | Módugá. | Palás. | Madras. | |
| 5 | Casuarinaceæ. | Casuarina Muricata. | Horse tail casuarina. | Savookoo marum. | ..... | ..... | Madras. | |
| 6 | Cedrelaceæ. | Cedrela toona. | Toon tree. | Toon marum. | ..... | Toon. | Salem. | |
| 7 | Flacourtiaceæ. | Bixa Orellana. | Anatto. | Jabra veray. | ..... | ..... | Madras. | |
| 8 | Rubiaceæ. | Oldenlandia umbellata. | Chayroot. | Saya or Emboorel wer. | Tsheri-velloo. | ..... | Madura. | |
| 9 | Melastomaceæ. | Memecylon tinctorium? | ..... | Casau elley. | Aliakoo. | ..... | Madras. | |
| 10 | Apocynaceæ. | *Wrightia tinctoria.* | Pala Indigo. | Pala neelum. | Pala Neelie. | ..... | Salem. | |
| 11 | Moraceæ. | Maclura tinctoria. | Fustic wood. | ..... | | ..... | Madras. | |
| 12 | Combretaceæ. | Terminalia chebula. | Myrobolan. | Kadukai. | Cárákaia. | Hara. | Madras. | |
| 13 | Rhamnaceæ. | Ventilago? | ..... | Pupley chuckay. | ..... | ..... | Salem. | |
| 14 | Leguminosæ. | Hœmatoxylon campechianum. | Logwood. | ..... | ..... | ..... | Madras. | |
| 15 | Do. | Cœsalpinia sappan. | Sappanwood. | Varthengee cuttay. | Bukkum. | Bukkum. | Salem. | |
| 16 | Do. | Indigofera tinctoria. | Indigo. | Averie neelum. | Neelie. | Neel. | Madras. | |
| 17 | Xanthoxylaceæ. | Toddalia aculeata. | Prickly Toddalia. | Molakarunnay. | Conda cashinda. | | Madras. | |
| 18 | Leguminoseæ. | Peterocarpus santalinus. | Redsandal wood. | Ségápooshándánum. | Kuchandanum. | Ruckut chundum | Naggery Hills. | |
| 19 | Do. | Adenanthera pavonina. | Red wood tree. | Anay goondoomoney. | | | Madras. | |
| 20 | Zingiberaceæ. | Curcuma longa. | Turmeric. | Munjil. | Passapoo. | Huldie. | Madras. | |
| 21 | Leguminosæ | Cassia tora. | Oval leaved Cassia. | Tagaray veray. | Tantim | Chakunda. | Madras. | |
| 22 | Terebinthaceæ. | Semecarpus anacardium. | Marking nut. | Shayng cottay. | Neelajiedie. | Bheela. | Madras. | |
| 23 | Rubiaceæ. | Morinda citrifolia. | ..... | Noona. | Molooghoodoo | ..... | Madras. | |
| 24 | Do. | Morinda ——— ? | ..... | Noona. | Molooghoodoo. | ..... | Madras. | |
| 25 | Do. | Morinda ——— ? | | Noona. | Molooghoodoo. | ..... | Madras. | |

Madras, 15*th January* 1857.

MR. W. WATERS, EXHIBITOR.

8550 Model of a Merchant vessel, made and rigged by Exhibitor, Rs. 150.

W. E. COCHRANE, ESQ., EXHIBITOR.

8551 Frame of Photograph positives on glass.

MR. EDWARD LOARER, EXHIBITOR.

8552 Bleached vegetable Wax 4½ as. per lb.

8553 Do. do. do. as used for railway grease 3½ as. per lb.

8554 Do. more refined, (containing a larger proportion of stearine) for making candles and soap 3½ as. per lb.

8555 Do. same as 8553 but having undergone a process preparatory to bleaching 3½ as. per lb.

8555A. Specimens of soap made from the above 3 as. per lb.

8555B. Specimens of candles made from ditto 5 as. per lb.

(*Exhibitor holds patent for the above, issued at Calcutta 31st Oct.* 1856, *and notified in the Fort St. George Gazette 28th Nov.* 1856.)

T. VARAMOORTHY CHETTIAR AND SOOBOO CHETTIAR, EXHIBITORS.

8556 Piece Arnee muslin, 16 yards by 4 ft 6 in. Rs. 100

8557 Do. do. do. Rs. 80

CAPTAIN BENSON, SUB ASST. COMMISSARY GENERAL, MOULMEIN, EXHIBITOR.

*Woods.*

8558 Thain-bau-sho.

8559 Sho-nai, (signifies red wood)

8560 Shoay-pen ( „ white wood)

8561 Shoay-nakoa ( „ forked leaf.)

8562 Oa-Shoay . ( „ thick skin.)

8563 Tha-na.

8564 Noung pain.

The above are profusely scattered throughout the jungles, in the Martaban and Tenasserim Provinces.

The fibre from the inner bark of these trees is extensively used by the Natives in making ropes. Nos. 8558, 9, 60 & 62 produce a strong and durable article, and the ropes manufactured therefrom, are used as cables for Chinese Junks and other Native Vessels. No. 8558 has been employed in making head ropes, nose ropes, &c. for the Commissariat Department Bullocks, at least 800 head of cattle have been so supplied by the Departmental servants ; a specimen of these ropes is forwarded.

The fibres of these provinces afford a wide field for experiment, being objects of practical utility—for both the bark and wood, can by a simple process, be converted into ropes, gunny, &c.

8565 Theetsee or "Melanorrhœa usitata" of Wallich. Salween river Province Tenasserim.

8566 Enj-gyeen "Shorea robusta," do. do. do.

These two logs are very fine specimens of these woods. The Thetsai varnish is obtained from the former. The grain is close, and appears well adapted for blocks, tool handles, furniture, &c. The Enjgyeen is stated to be a still tougher wood, stands well in water, and it is reported to be capable of petrifaction from the action of the water, and logs have been seen lying on the banks of rivers, with the portion submerged, petrified, whilst the other remains sound wood, useful for supports of piers, wharves, &c.

8567 Jackwood, Province Tenasserim.

8568 Mountain Jackwood.

These woods are used as a yellow dye in Burmah.

8569 Kaoung-ya.

8570 Thoay-oo-aing.

8571 Pyen-Kado or Xylocarpa, McClelland.

The Pyen-Kado is a hard iron-like wood, serviceable for pier posts, the bark is used medicinally in the cure of flesh wounds. Nos. 8569 & 70 are used in like manner, medicinally only.

8571A. Theeka bark. vide No. 8582.

This yields a superior tannin—it is also used by the Shans as a substitute for Betel-nut, found in large quantities near Amherst.

8571B. Acha, "Morinda."

Obtained in abundance—used as a red dye—the wood is pounded, soaked in water for 3 days, strained, and boiled until the water evaporates.

8572 Theetsin from Amherst, vide 8.

8573 Thar-ra-be. (McClelland page 132.)

8574 Paugah. (do. „ 129.)

8575 Theyah.

8576 Bamboo.

8577 Eudyke.—Dalbergia.

8578 Thingan.—Hopea odorata (McClelland page 136.)

8579 Kaiyah.

8580 Noukchoo.

8581 Thountalay most like Toungah, (McClelland page 134.)

8582 Theeka.

These specimens offer an opportunity of testing their practical value, they are little known except to Natives. The Eudyke can be turned in the lathe into almost any form or design. Bamboo is used for rice mills. Thingan for the bottom portion of Native Boats, durable in water, the tree grows to a large size near Tavoy.

*Carpets Manufactured in Moulmein Jail. and Specimens of Fibres.*

8583 Kai-sai-nai, "Urena lobata," or wild Mallow shrub.

8584 Tring-baw. Corchorus Fascus, or Fasisicularis, or Bunkabas.

8585 Hibiscus, Paritinum titiacerum.

8586 Species of Mallow.

These fibres are used by the convicts in the Moulmein Jail in the manufacture of Carpets, Gunny, Twine, Rope, &c.

The large Carpet marked 1, is made of the Urena lobata fibre; the fibre is soaked in water for 9 days or so, then beaten, and thoroughly cleansed, dried, and woven, the coloring is also from the raw products of the Province. No 2 Carpet is similarly made as the above from the Corchorus Fascus or Fasiscularis.

8587 Manufactures from the above plants.

8588 do. do. do.

8589 do. do. do.

8590 do. do. do.

8591. Table cloth from Pine Apple Fibre.

8592 Variety of Cotton articles (of Jail manufacture.)

8593. Is a specimen of cotton and seed grown in Moulmein, from seed obtained long since from a sample of Pernambuco, it may now be said to be indigenous, a sample of this realized 6½ *d.* per lb. in the home market, it is a kind well suited to Indian cultivation, the seed being easily separated from the cotton; in the vicinity of Moulmein sufficient cotton is produced for local consumption.

8593A. A Box of Cocoons, Silk and Tusser. These are abundant at Moulmein, the moth is of large dimensions. "Mason" on the products of the Tenasserim Provinces states it as being the Atlas Moth. A specimen of the moth was forwarded to the Museum in September last.

8593B. Dyes. No 1. Box containing Lac, Lac-dye, shell lac, Indigo, Green ditto, Buckam-Lac and Wild Indigo, are in profusion in the Provinces.

8593C. No 2. Red dye from the Sapan wood.

This specimen was procured from the Shans, it affords a rich color and resembles Madder, value 12 Rs. per 100 viss. A sample has been sent to the Home market, but the result was not so favorable as anticipated: the novelty of the product may account for this, the wood itself has a free sale there.

*Minerals.*

8594 Tin ore from Mergui.

8595 Do. Henzai.

8596 Lead ore from Dodume river, Province Martaban.

8597 Antimony from near Moulmein and Henzai—this specimen is doubtful.

8598 Iron ore—found near Kudan on the Salween river.

8599 Tin—said to have been brought from near Shoay Gyeen, where it is found in large quantities, and of a rich kind.

Tin is found in some quantities in the South of these Provinces, at Henzai; it is exported at a value of 120 to 130 Rs. per 100 viss, or 365 lbs. Lead and Antimony are also found here, the former is imported from Ava. On the hills, S. E. of Maulmein distant at 3 miles, Antimony is found.

8600 Limestone.

This specimen was procured from a lime kiln near Kagoon on the Salween river. The Mountains in this vicinity are chiefly of limestone formation, and from being near navigable rivers whose banks are covered with Jungle, the burning and transport becomes easy. The Market price, however, averages 2 annas per basket of about 2 or 2½ viss. It is largely exported to Rangoon and other parts.

8601 Petroleum, from Ava. This article is greatly exported to England for the manufacture of candles, &c., this mineral production would, I think, be found a good material for the manufacture of Gas, as Oil Gas.

8602 Maulmain Earthenware.

The clay is found in the vicinity of Maulmein, the white is from the Pagoda Hill, and frequently used as pipe clay by the Soldiers.

The glazing is imported from Ava, it is the dross or debris from Silver or Lead, and when in a state of fusion, mixed with shell-lac. The glazing is exported in no inconsiderable quantities.

*Vegetable.*

8603 Specimen of Camphor.

The Camphor plant here does not produce a superior quality, its manufacture has not been successful.

8604 The Root marked No 2, said to produce Camphor, certainly yields something very similar in smell.

8605 Tobacco.

8606 Wood Oil.

8607 Cocoanut Oil.

8608 Theetsay dammer.

The Tobacco grows luxuriantly on the Islands in the rivers, and is sold at the rate of 30 to 40 Rupees the 100 viss.

The tobacco seems good, but it is nevertheless objected to by the Sepoys and Native followers hence the necessity of importing Coringa Tobacco; this importation must act prejudicially to the interests of these provinces, and certainly does not act as an incentive to the cultivation of a better description.

THE SOUTH INDIA CHRISTIAN SCHOOL BOOK SOCIETY, EXHIBITORS.

8609 English 1st Book.
8610 Do. and Tamil 1st Book.
8611 Do. 2nd Book, with Tamil Vocabulary.
8612 Do. 3rd do.
8613 Tamil lessons on Sheets No. 6 on Mill Boards.
8614 Do. do. do. 7 do.
8615 Do. do. do. 1 do.
8616 Do. do. do. 2
8617 Tamil 1st Book.
8618 Do. 2nd Book.
8619 Do. New Testament History.
8620 Do. Mental Arithmetic.
8621 Do. Pope's 1st Grammar.
8622 Telugu 1st Geography,
8623 Map of India.
8624 English lesson on sheets No. 1.
8625 Do. do. do. 2.

Bryce McMaster, Esq., Exhibitor.

8626 Double dagger on Ibex horns.
8627 Moorman dagger in leather sheath with Copper handle and mountings.
8628 Stone Goglet.
8629 2 Stone Cups.
8630 Powder flask of iron, brass mounted.
8631 2 Elephant tooth boxes.
8632 Goomsoor battle axe head.

C. Streenevasooloo Naidoo, Exhibitor.

8633 Small plate cup.
8634 Wooden painted bird.
8635 Miniature book of beauty 1841.

T. Vasudavoo, Tinnevelly, Exhibitor.

8636 { 4 Bags Coffee 1 Sort or Round Coffee Rs. 140 per Candy.
8636 { 2 do Common Coffee Rs. 105 per Candy.
8637 1 Bale Senna 250 lbs Rs. 80 per bale.
8638 1 Bag Paddy.

Coopchund, Tinnevelly, Exhibitor.

8639 1 Bag Senna 125 lbs.
8640 1 Do Bourbon Cotton 25 lbs.
8641 1 Do Bourbon do 25 lbs.
8642 1 Package Indigo 1 Viss.
8643 1 Do Arrow Root 10 lbs.

W. E. Underwood, Esq., Exhibitor.

8644 Aloe fibre made for exportation at Tinnevelly from the green leaf without rotting.

Dr. Jesudasen, N. S., Exhibitor.

8645 Vegetable drugs. } *The lists will be published in a supplemental Catalogue.*
8646 Mineral do. }
8647 Animal do. }

J. Rohde, Esq., M. C. S., Exhibitor.

8648 Platform Cart, Guntoor made, well fitted for carriage of baggage and furniture.
8649 Sections of Elephants Teeth.

Mr. P. R. Hunt, *American Mission Press*, Exhibitor.

8650 10 Copies Pope's First Lessons in Tamil at 4 Rs.
8651 14 Gospel Portions in Telugu.
8652 20 Tamil Tracts sold for 6 Pie each.
8653 2 Copies Young Communicant's Guide
8654 Specimen of Manilla Wrapping Paper (*extremely valuable for its toughness; is easily written on and has an agreeable color.*)

Allaypah Naick, Exhibitor.

8655 26 pieces of fossils collected in Rangoon.

Messrs. Simpson and Co. Exhibitors.

8656 Circular slab of Jack wood 7½ feet diameter.

G. M. Kistnasawmy Chettiar, Exhibitor.

8657 Car of bead work.

Asst. Surgeon St. G. Williams, M. D., Exhibitor.

*Russian Trophies.*

8658 4 Muskets with bayonets.
8659 3 Swords.
8660 Brass Kettle.
8661 Do Coffee grinder.
8662 Helmet brass mounted.
8663 Cartouche box.
8664 Plaster of Paris figure.
8664½ Piece of one of the Cathedral Bells of Sebastapol.

George Latham, Esq., C. E., Madras Railway, Exhibitor.

*Calotypes.*

8665 Banquetting Hall and Government House.
8666 Marine Villa.
8667 Chepauk Palace.
8668 Pagoda Pursewaukum.
8669 Do. St. Thomé.
8670 Do. do. another view.
8671 Mosque Triplicane.
8672 St. Andrew's Church Vepery.
8673 Bridge over Cochrane's Canal.
8674 Do. at Royapoorum Station.
8675 Do. do.
8676 Station House Royapoorum.

*Colored Calotype.*

8677 Bungalow at Tripatoor.

*Photographs.*

8678 Moguls.
8679 Madras Beggars.
8680 5 Portraits (*one in Native costume*)

Asst. Surgeon W. R. Oswald, M. D., Exhibitor.

8681 Water from Thermal springs in the Saugor Talook, Nuggur Division, Mysore.

Lieut.-Colonel A. McCally, Exhibitor.

8682 Folding chair on Brown's principle.
8683 Folding Camp Bed.
8684 Almira containing Specimens of the supplies of the Commissariat Department
8685 Model Burmese Cart.
8686 A specimen of teak timber bored by the Teredo navalis.
8687 Folding Camp Table.
8688 Cocoanut oil soap.

Times, manufactured by Mr. James Shearer, London.

8761 Eight-Day Gilt, Or-Molu Clock, with an Auxiliary movement, working a model ship at sea, by Bolviller, Paris.

8762 14 inch Dumpy Level—with compass shewing the addition of Guards for the levels, by Messrs. Elliott Brothers, London.

8763 6 inch Everest Theodolite, shewing the latest improvements, by the same makers.

8764 Large Rosewood Dressing Case with Silver fittings and mountings and Secret drawers.

8765 Bleached Elkhorn Tea Caddy inlaid Ivory and Sandalwood from Vizagapatam.

8766 Case containing sundry specimens of English, French and Indian Manufactures. Mathematical Instruments, Military Accoutrements, &c.

---

Mr. Peter Orr, Exhibitor.

8767 Overshot Water-wheel Punkah Propeller in action. Is capable of pulling a series of punkahs.

*Invented and patented by the Exhibitor.*

---

Messrs. Shaw & Co., Exhibitors.

8768 Round Camp Table Rs. 16.
8769 Folding easy Chair Rs. 21.
8770 Camp Lounging Chair Rs. 15.
8771 Do Dining Chair Rs. 7.
8772 Crimean Iron Camp Cot Rs. 25.
8773 Crimean do do do Rs. 25.
8774 Close Commode with back, Portable Hydraulic & Inodorous Rs. 70.
8775 Portable Water Closet Rs. 75.
8776 Patent self Rolling Mangle Rs. 100.
8777 Patent Commode Pan Rs. 10-8.
8778 Painted Tin Washing Service, containing Basin, Can. Soap Brush and sponge Trays and small Water Jug Rs. 20.

---

C. Casavah Moodelliar, Exhibitor.

8779 Sample of Bricks intended for the proposed University.

---

Lieut. Richard A. Roberts, Exhibitor.

8780 Bison's head and horns complete.

---

Dr. Brandis, Conservator of Forests, Pegu, Exhibitor.

*Burmese Articles.*

8781 Small Basket.
8782 Large Basket.
8783 Do. do.
8784 Small do.
8785 A bundle of Mats, Chattas, Brooms, &c.
8786 Six Shan Hats.
8787 Burmese dish with cover.
8788 Burmese trays and dishes.
8789 Box containing bottles of various oils, &c.
8790 Two Large Mats.

---

E. L. Dickson, Esq., Exhibitor.

*Manufactures in Pith.*

8791 Model of Seerungum Pagoda Rs. 25.
8792 Do do do Inside Rs. 25.
8793 Do do do Outside Rs. 25.
8794 1 Pair of Dancing Girls Rs. 20.
8795 Model of a Pagoda Rs. 25.
8796 1 Pair of Mahomedan Fackeers Rs. 20.
8797 Do. Ground Cutter Rs. 20.

---

Edward Balfour, Esq., Officer in Charge of Government Central Museum, Exhibitor.

8798 Six Barrelled Revolver Pistol with bullet mould.
8799 55 Walking Sticks, Canes, &c.
8800 Collection of Mineral substances fitted for grinding, sharpening and polishing materials.
8800½ Portrait of Australian Savage, Rs. 50.

---

B. Norfor, Esq., Cuddalore, Exhibitor.

8829 Machine for raising water.
8830 Model of a bridge.

---

The Madras School of Industrial Arts, Exhibitors.

*Works in Plaster of Paris.*

8831 Statue of Athlete with the Strygil.
8832 Do. Venus of Milo.
8833 Do. Fighting Gladiator.
8834 Do. Dying Gladiator.
8835 Do. Slabs from the Elgin Marbles.
The Two Equestrian Processions Complete
The Procession of Dressed Female Figures and of Sitting Figures.
8836 Bust of Septimus Severus.
8837 Do. of Lucius Verus.
8838 Do. of Apollo.
8839 Do. of Rome.
8840 Do. of Cicero.
8841 Do. of Young Augustus.
8842 Fragment of the Neapolitan Psyche.
8843 Bust of Juno.
8844 Torso of a youth.
8845 Casts of Hands and Feet.
8846 Do. of Ornaments.

---

Tanampett P. Coomaravaloo, Exhibitor.

8847 5 pairs of bangles (31 in number) from Tanjore.

# SUPPLEMENT.

## THE FOLLOWING IS THE LIST IN EXTENSO OF DRUGS EXHIBITED BY DR. JESUDASEN, N. S.

8848 *Vegetable Drugs.*

| No. | Latin or English Name. | Native Name. | Remarks. |
|---|---|---|---|
| 1 | Abrus precatorious white seeds. | Vellakoondoomany. | Used as a paste over bites of poisonous insects. |
| 2 | Do black seeds. | Karooppookoondoomany. | |
| 3 | Do red seeds. | Segappookoondoomany. | |
| 4 | Do root. | Koondoomany Vayr. | |
| 5 | Accacia arabica bark. | Karoovalum puttay. | Astringent, its decoction used as gargle in sore mouth. |
| 6 | Do fruit. | Do Kai. | Astringent alterative. |
| 7 | Acorus calamus kind of | Nauby. | Febrifuge an active Vegetable poison. |
| 8 | Do sweet flag. | Vassumboo. | Carminative used in diarrhœa. |
| 9 | Achyranthus aspera. | Naiooroovy. | Used to allay thirst and in dryness of the mouth. |
| 10 | Acalypha indica. | Kooppamany. | Febrifuge Tonic. |
| 11 | Agrostis Linearis. | Arookun Vayr. | Refrigerant. |
| 12 | Ail puttay. | Ail puttay. | Stimulant Febrifuge. |
| 13 | Ailanthus excelsa. | Paroomaruttoo puttay. | Used in dyspeptic complaints. |
| 14 | Alpinia galanga, greater. | Peyr aruttie. | Expectorant. |
| 15 | Do do lesser. | Sittaruttie. | Expectorant. |
| 16 | Aloe litteralis. | Kuttalie. | Purgative Refrigerant. |
| 17 | Aloes. | Kariapolum. | Purgative. |
| 18 | Asisticum Crinum. | Vesha moonghe ellay. | Emetic, its juice used in ear ache. |
| 19 | Alangium decapitalum bark. | Kadalalinge puttay. | Used in Diabetis. |
| 20 | Do do root. | Alingil vayr. | Do |
| 21 | Do do seeds. | Do cottay. | Do in Rheumatism and in Leprosy. |
| 22 | Do do bark. | Do puttay. | Do |
| 23 | Do do | Sevvalingee puttay. | Do |
| 24 | Do do | Do vayr. | |
| 25 | Euphorbia pilulifera. | Ammamputch arisee. | Its juice used in aphthus affections. |
| 26 | Allium Cepha seeds. | Vengaya verei. | Refrigerant, used as poultice to hasten Suppuration. |
| 27 | Alhaji maurorum. | Turingebean. | Tonic, used in Combination with purgatives. |
| 28 | Amomum Zingiber. | Sookoo. | Aromatic Carminative. |
| 29 | Amaranthus Campestris. | Sirrookeeray vayr. | Refrigerant. |

## VEGETABLE DRUGS.—*(Continued.)*

| No. | Latin or English Name. | Native Name. | Remarks. |
|---|---|---|---|
| 30 | Amygdalus Communis. | Vathoomay cottay. | Tonic demulcent. |
| 31 | Anethum graveolens. Dill seed. | Sathacooppy. | Used in amenorrhœa. |
| 32 | Anas crecca. | Kieloova puttay. | Antibilious. |
| 33 | Anthemus pyrethrum. | Akkarakarum. | Expectorant used also to allay thirst. |
| 34 | Anthemis nobilis Chamomile. | Samunthippoo. | Antibilious. |
| 35 | Andropagan muricatus. | Vetty vayr. | Aromatic Stimulant Febrifuge allays thirst. |
| 36 | Do muricatum. | Vilamilcham elay. | Antibilious. |
| 37 | Do. Lemon grass. | Kamatchy pilloo. | Aromatic Stimulant. |
| 38 | Anerrhoa Carambola. | Thamerthum Kai. | Antibilious. |
| 39 | Appabulsan. | Appabulsan. | Used in head affections. |
| 40 | Aftheman. | Aftheman. | Stimulant used in head affections. |
| 41 | Abboollaus. | Abboollaus. | Used as antidotes to poisons. |
| 42 | Aquila. Eagle wood. | Akil Cuttay. | Tonic, used in Rheumatism and fever. |
| 43 | Arabis Chinensis. | Alli Verei. | Diuretic Demulcent. |
| 44 | Argemone mexicana. | Brimathumdoo Verei. | Used in Rheumatism. |
| 45 | Artemesia indica. | Maseputhere. | Refrigerant. |
| 45½ | Do Maderapatana worm wood. | Do | Do |
| 46 | Aristolochia indica. | Esoora Vayr. | Used in dyspepsia. |
| 47 | Areka catichu. | Kalipaukoo | Laxative. |
| 48 | Asbestos. | Kulnar. | Refrigerant used also in tooth complaints. |
| 49 | Asparagus Sarmentosis. | Thumneervittang Kalangoo. | Diuretic. |
| 50 | Astragalus Verus. | Vathoomacottay pissin. | Tonic used also in Admoplysis. |
| 51 | Asclepias Vomitoria. | Paroocooringan. | Febrifuge. |
| 52 | Do gigantea. | Vellaroogun. | Stimulant. |
| 53 | Aspalathus indica. | Sevanar vâmboo. | Used in leprosy and other Skin Diseases. |
| 54 | Asclepias prolifera root. | Nanjarappan Vayr. | Stimulant. |
| 55 | Do bark | Do puttay. | Do |
| 56 | Andrachne cadishaw. | Wodoovunkai. | Poisonous applied to ulcers. |
| 57 | Athevadium. | Athevadium. | Carminative used in diarrhœa and Rheumatism. |
| 58 | Bambusa arundinacia. | Moongilooppoo. | Carminative. |
| 59 | Bamboo Seeds. | Moongil aurisee. | Do |
| 60 | Banian Seeds. | Paulungoo Veray. | |
| 61 | Baikumba. | Baikumba. | Stimulant. |

| | | | |
|---|---|---|---|
| 62 | Bahamani suffed. | Bahamani Suffed. | Tonic; Cooling. |
| 63 | Do Sooruk. | Do. Sooruk. | Tonic Stimulant. |
| 64 | Baykabanoosha. | Baykobanoosha. | Cooling. |
| 65 | Ballota disticha. | Votha paimaruttie. | Used in Rheumatism. |
| 66 | Barleria Longifolia. | Neermoolli Vayr. | Tonic. |
| 67 | Do. Seeds of | Do Verei. | Tonic Refrigerant. |
| 68 | Bassia Longifolia. | Elooppa chuckay. | Used in Rheumatic Affections. |
| 69 | Do flower. | Do poovoo. | Stimulant. |
| 70 | Bdellium. | Kookul. | Used in Rheumatism. |
| 71 | Beesbund. | Beesbund. | Narcotic. |
| 72 | Bojuthan. | Bojithan. | Used in urinary diseases. |
| 73 | Boerhavia diffusa. | Moocoorutta Vayr. | Do in Rheumatism. |
| 74 | Bombax pentandrum. | Elavam pissin. | Tonic. |
| 75 | Do bark. | Do puttay. | Astringent used to suppress Vomiting. |
| 76 | Do root. | Do. Vayr. | Refrigerant used in Hœmaturia. |
| 77 | Bryonia Grandis. root. | Kovay Vayr. | Alterative. |
| 78 | Do *Callosa* root. | Paroothoomatty Vayr. | Used in amenorrhœa. |
| 79 | Do Epigea. | Agasacaroodun Calungoo. | Given as antidotes in poisons. |
| 80 | Do Spicies of | Sookkang kai Verei. | Laxative used in Rheumatism. |
| 81 | Do Rostrata. | Appookova Vayr. | Alterative used in diabetes. |
| 82 | Bringal Root. | Kuttire Vayr. | Expectorant, Diuretic. |
| 83 | Butea Frondosa Nuts. | Porasum Verei or cottay. | Vermifuge. |
| 84 | Do Gum. | Do pissin. | Refrigerant Tonic. |
| 85 | Do Seeds. | Do Verei. | Vermifuge. |
| 86 | Do Flower. | Do poovoo. | Tonic, refrigerant. |
| 87 | Castus arabicus. | Kostum. | Cooling, Tonic. |
| 88 | Caryophilli, Cloves. | Kramboo. | Stimulant, Aromatic, Carminative, and Antibilious. |
| 89 | Curcuma Zedoaria. | Kustoory munjul. | Tonic, used in psoriasis. |
| 90 | Do Angustifolia. | Kooga neeroo. | Refrigerant. |
| 91 | Do Zerumbet, | Poolangkalangoo. | Tonic. |
| 92 | Curculigo orchioides. | Nelappana kalungoo. | Tonic. |
| 92½ | Do root. | Do. Vayr. | Tonic. |
| 93 | Cucumis Sativus Seeds. | Velleri Verei. | Diuretic. |
| 94 | Do Colocynthus Coloquintida. | Thoomuttikai. | Purgative, used in Amenorrhœa. |
| 95 | Cutichu. | Kuttacamboo. | Astringent. |
| 96 | Cucumis orijeram root. | Nelapoosini Kalangoo. | Tonic. |
| 97 | Cucurmis acutangulus Seeds. | Peypeerkum Verei. | Antibilious. |
| 98 | Do | Peypeerkum Kody. | Stimulant. |
| 99 | Chloroxylon dupada Dammer. | Koongilium. | Used in Diarrhœa. |

## VEGETABLE DRUGS.—*(Continued.)*

| No | Latin or English Name. | Native Name. | Remarks. |
|---|---|---|---|
| 100 | Cyprus juncifolius. | Korakalungoo. | Cooling Tonic. |
| 101 | Clitorea ternatea Seeds. | Kakatan Verei. | Purgative. |
| 102 | Do white root. | Vella Kakatan Vayr. | Laxative. |
| 103 | Do black root. | Karooppoo Kakatan Vayr. | Do. |
| 104 | Colyptianthus Jambolana. | Tukkolum. | Cooling, Sudorific, Tonic, astringent. |
| 105 | Do Cargaphilli folia root. | Naval pavukka Vayr. | Alterative. |
| 106 | Coronilla sesban bark. | Sembooran puttah. | Used in Children for Cutaneous diseases. |
| 107 | Cassia auriculata | Avarum poovoo. | Astringent, Tonic, used in diabets. |
| 108 | Do Seeds. | Do Verei. | Do. |
| 109 | Do Fistula. | Surrayconna palum. | Laxative. |
| 110 | Do Lignea. | Lavoonga puttay. | Carminative. |
| 111 | Do Lara Seeds. | Thagara Verei. | Tonic. |
| 112 | Do Legnea China. | Perroolavanga puttay. | Carminative. |
| 113 | Do Rangoon. | Bungole lavoonga puttay. | Do. |
| 114 | Cannabis Sativa. | Kunja Veri. | Narcotic. |
| 115 | Cannabis Indica. | Kunja elay. | Do. |
| 116 | Cleome Viscosa. Dog mustard. | Naikadoogoo. | Used in amenorrhæa and in gastritis. |
| 117 | Do. Fruticosa. | Viloothy Vayr. | Purgative. |
| 118 | Catichu. | Cassicutty. | Astringent. |
| 119 | Colombo Root. | Calumbo. | Tonic. |
| 120 | Croton Tiglium Seeds. | Neervala Cottay. | Purgative. |
| 121 | Creat. | Nautoo Nelavamboo. | Tonic Febrifuge. |
| 122 | Cratœva Tapia. | Navalinga puttay. | Stimulant. |
| 123 | Do religeosa bark. | Vilva puttay. | Refrigerant used also in leprosy. |
| 124 | Calamus Draco. Dragons blood. | Kandomoorooga ruttum. | Used in Tetanus and fever. |
| 125 | Carica papaya. | Puppili Verei. | Antibilious. |
| 126 | Cynanchum extensum root. | Voothamany Vayr. | Used in Rheumatism. |
| 127 | Carissa root. | Kila Vayr. | Used in profuse perspiration, thirst and indigestion. |
| 128 | Do Species of | Sothakila Vayr. | Do do do do. |
| 129 | Cissus. | Kistna palay. | Used in Rheumatism and Indigestion. |
| 130 | Castor root | Amanakun Vayr. | Laxative. |
| 131 | Do root. | Pillamanakun Vayr. | Do Stimulant. |
| 132 | Clerodendrum phlomoides. | Thaloothali Vayr. | Stimulant used in Rheumatism. |

| | | | |
|---|---|---|---|
| 133 | Cathartocarpus Fistula. | Amultas Verei. | Cathartic. |
| 134 | Cardiaspermum Halliocacabum. | Moodakothan. | Purgative. |
| 135 | Caryota. | Authunda paulay. | Given in head aches. |
| 136 | Calophyllum, kind of | Nauga puttay. | Astringent. |
| 137 | Do. Inophyllum. | Pinnakai. | Used as liniment in dimness of sight. |
| 138 | Crotalaria Verrucosa. | Votha Kelookiluppie. | Used in Rheumatism, Scrophula and Skin Affections. |
| 139 | Crocus Sativus Saffron. | Coongoomappoo. | Stimulant. |
| 140 | Conyza same as. | Sittoolaw Vayr. | Laxative. |
| 141 | Cissus Acida. | Poolinaroolay. | Used for piles. |
| 142 | Convolvulus Speciosus. | Peymooshooti. | Used in diabetis. |
| 143 | Do. Turpethum. | Sevatha Vayr. | Purgative. |
| 144 | Coffea Arabica. | Coppy Cottay. | Emmenagoge, used in Rheumatism. |
| 145 | Camphor Surat. | Soorathoo Curpooram. | Do Stimulant. |
| 146 | Do Crude. | Putcha Curpoorum. | Refrigerant. |
| 147 | Coriandrum Sativum Seeds. | Cothamullee. | Do Antibilious. |
| 148 | Cuminum Cyminum. | Seeragam. | Used in Rheumatism. |
| 149 | Cæsalpinia bonducella. | Kalichi Kai. | Carminative, used in fever and jaundice. |
| 150 | Coscinium Fenestratum. | Maramunjul. | Refrigerant. |
| 151 | Cacalia Kleinia flower. | Kavasban poovoo. | Do |
| 152 | Do bark. | Do puttay. | Refrigerant, used in retention of urine. |
| 153 | Cidiaris. | Ajuralivooth. | Diuretic. |
| 154 | Carthamus Tinctorius. | Koosoom Verei. | Tonic. |
| 155 | Cuspidata. | Poonna Kalee. | Do |
| 156 | Calabash, Seeds of | Sora Verei. | Aromatic. |
| 157 | Cinnamon leaves. | Lavoonga puthree elay. | Tonic, refrigerant. |
| 158 | Chenopodium Album Seeds. | Parooppookeera Verei. | Refrigerant. |
| 159 | Sanseviera Zeylonica. | Marul Kalungoo. | Tonic Cooling. |
| 160 | Carrot Seeds. | Kajund. | Alterative. |
| 161 | Calotropis Gigantea. | | |
| 162 | Coldenia Procumbens. | Peruncheruppada. | Used in Rheumatism. |
| 163 | Conessi Root. | Veppala Vayr. | Used in Skin diseases. |
| 164 | Dalbergia Arborea. | Poongam Cottay. | Emetic. |
| 165 | Dammer, Species of | Noray Koongilium. | Refrigerant. |
| 166 | Datura root. | Marul Oomathay Vayr. | Tonic. |
| 167 | Dracontium, its bulb. | Kattoocaroonay. | Used in hæmorrhoids. |
| 168 | Diospyros ebenum root. | Karoongali Vayr. | Do in diabetis. |
| 169 | —— Do bark. | Do puttay. | Do — |
| 170 | Dioscorea bulbifera. | Kauttoo Vullee. | Used in rheumatism. |
| 171 | Dolichos pruriens, Cowhage. | Poonakaule Verei. | Tonic. |

## VEGETABLE DRUGS.—*(Continued.)*

| No. | Latin or English Name. | Native Name. | Remarks. |
|---|---|---|---|
| 172 | Dammer black | Karooppoo Koongileum. | Refrigerant. |
| 173 | Eclipta erecta seeds. | Karoosalongkunny Verei. | Do |
| 174 | Elœocarpus Lanceolatus berries. | Rutheratsham. | Expectorant. |
| 175 | Elettaria Cardamomi. Cardamoms. | Yalakai. | Aromatic. |
| 176 | Do Seeds. | Yala arisee. | Carminative. |
| 177 | Erythroxylon areolatum. | Thavathary Cuttay. | Refrigerant Tonic. |
| 178 | Do root. | Do Yayr. | Used in head affections. |
| 179 | Erookalun Vayr. | Eerookaulun Vayr. | Used in rheumatic affections. |
| 180 | Eugenia Racemosa, buds of | Maratia mooghoo. | Astringent used in diarrhœa. |
| 181 | Do do | Kadappum Vayr. | Used in rheumatic cases. |
| 182 | Euphorbia nerüfolia. | Yala Kullee. | Purgative. |
| 183 | Do Tiroocalli root. | Theroogookullee Vayr. | Purgative. |
| 184 | Exacum hyssopifolium. | Vellerookkum elay. | Stimulant. |
| 185 | Do Pedunculatum. | Kanappoondoo. | Febrifuge. |
| 186 | Erythronium Indicum. | Naryvenkayaum. | Used in hæmorroids. |
| 187 | Evolvulus alsinoides. | Vishnookaranthy. | Febrifuge. |
| 188 | Feronium Elephantum root. | Velaw Vayr. | Refrigerant. |
| 189 | Ferrula assafœtida. | Paroongayam. | Stimulant Antispasmodic. |
| 190 | Ficus racemosa. Fig Seeds. | Athi Verei. | Tonic, Astringent, Demulcent. |
| 191 | Do bark. | Do puttay. | Do Do |
| 192 | Do Religiosa seeds. | Arasam Verei. | Tonic refrigerant. |
| 193 | Do bark. | Do puttay. | Do |
| 194 | Do racemosa, wild flowers of | Katoo athi poovoo. | Astringent used in diarrhœa. |
| 195 | Do Indica fruits. | Kooroove alunkai. | Used in Rheumatism. |
| 196 | Do Bengalensis bark. | Alum puttay. | Refrigerant. |
| 197 | Do do root from the branch. | Alum Vishoothoo. | Do alterative. |
| 198 | Flacourtia Cataphracta. | Thalisaputheree. | Stomachic, Carminative. |
| 199 | Flag poisonous, white. | Kalappa kalangoo. | Stimulant. |
| 200 | Do black. | Karoo Nauby. | Sedative, Febrifuge. |
| 201 | Fumosa Officinalis. | Shaatirraw. | Cooling said to purify blood. |
| 202 | Trigonella Fœnum Grœcum. | Vendium. | Astringent cooling. |
| 203 | Gardenia dumetorum. | Marookalunkai. | Stimulant. |
| 204 | Do | Marookkaray. | Stimulant. |

| | | | |
|---|---|---|---|
| 205 | Gambogia. | Mukky. | Vermifuge, diuretic. |
| 206 | Galiga Spinosa. | Mookkavalay. | Used in Rheumatism. |
| 207 | Do Purpuria root. | Kolingee Vayr. | Used in dyspepsia and tympanitis. |
| 208 | Gmelina asiaticus. | Nelakoomele Vayr. | Used in Gastritis. |
| 209 | Glue. | Vujjerum. | |
| 210 | Glinus dictamnoides. | Sirroosarooppady. | Refrigerant. |
| 211 | Glycyrrhiza Glabra Liquorice. | Athemathooram. | Do. |
| 212 | Gum acacia. | Karoovalum pisin. | Astringent used in tooth-ache. |
| 213 | Gum arabica. | Valam pissin. | Demulcent, Tonic. |
| 214 | Gum Benzoin. | Paul Sambrane. | Do. |
| 215 | Gum Tragacanth. | Vathooma Cottay pisin. | Do. |
| 216 | Gum elemi. | Gum elemi. | Stimulant. |
| 217 | Guilandina bonducella root. | Kalichikai Vayr. | Alterative Febrifuge. |
| 218 | Juniperus Communis. | Sundiruz. | Astringent used in cases of diarrhæa. |
| 219 | Hazel nut. | Binthook. | Refrigerant Tonic. |
| 220 | Hedysarum mummulari fol. | Sirroopullady. | Alterative. |
| 221 | Helicteres Isora. | Valumboorikai. | Tonic, used also as an ear liniament. |
| 222 | Helliborus niger. | Kadoogooroganee. | Drastic purgative. |
| 223 | Helliborus radix. | Do Vayr. | Do |
| 224 | Hemp Seeds. | Sanappa Verei. | Used in rheumatism. |
| 225 | Hibiscus populneus Seeds. | Poovarasum Verei. | Alterative. |
| 226 | Horse radish Gum. | Mooringa pisin. | Stimulant. |
| 227 | Do root. | Do Vayr. | Do |
| 228 | Hydrocotyle asiatic root. | Vullaray Vayr. | Used in rheumatism. |
| 229 | Do asiatica. | Vullary. | Alterative. |
| 230 | Hyosciamis niger Henbane Seed. | Korosani Omum. | Astringent narcotic, used in diabetes. |
| 231 | Illicium amatum. | Annasee poo. | Carminative. |
| 232 | Illecebrum lanatum. | Kunpoolay. | Used externally in cases of retention of urine. |
| 233 | Indigo. | Pooneelum. | Used externally over the bladder in cases of retention of urine |
| 234 | Indigofera arcuata. | Poonulthundoo. | Used in rheumatism. |
| 235 | Do anib root. | Avoory Vayr. | Refrigerant allays thirst. |
| 236 | Do argentea. | Iroomboorookky. | Antepathetical to Iron. |
| 237 | Do enneaphylla. | Seppooneringee. | Diuretic. |
| 238 | Inga dulcis, seeds. | Korakapoolli Verei. | Laxative. |
| 239 | Do fruits. | Korakaipooly. | Do Antibilious. |
| 240 | Imbora bark. | Imbooram puttay. | Carminative, used in cough. |
| 241 | Ingilikum. | Inkilicum. | Stimulant, used in lockjaw. |
| 242 | Intibus seeds. | Kassini Verei. | Cooling used to suppress vomiting and to remove bad taste [from the mouth. |
| 243 | Ipecac root. | Ipecac Vayr. | Emetic. |

## VEGETABLE DRUGS.—*(Continued.)*

| No. | Latin or English Name. | Native Name. | Remarks. |
|---|---|---|---|
| 244 | Ipomoca Guamoclit root. | Miermanickum Vayr. | Refrigerant. |
| 245 | Ipomoca Candicans. | Moossata Vayr. | Carminative, used also in diabetis. |
| 246 | Isinglass. | Isinglass. | Tonic. |
| 247 | Jaffera Seeds. | Jappara Verei. | Tonic. |
| 248 | Jareeshuck. | Jareeshuk. | Used in Leprosy and Skin diseases. |
| 249 | Jatropha montana. | Neeradimoothoo. | Alterative do |
| 250 | Jasimum augustifolium. | Kattoomullikay Vayr. | Stimulant. |
| 251 | Juniperis Communis. | Sundiruz. | Do. |
| 252 | Do. | Hab Hul. | Valuable substitute for pepper, diuretic. |
| 253 | Justicia paniculata. | Nelavamboo. | Tonic, febrifuge. |
| 254 | Do Repens. | Kodakasalay. | Used in Cutaneous diseases. |
| 255 | Kashi noray. | Kashi Noray. | Diuretic. |
| 256 | Karappan plant. | Karappan poondoo. | Used in Skin diseases. |
| 257 | Kaiphul bark. | Kaiphul chuckay. | Used in Rheumatism. |
| 258 | Kanrikoon. | Kaurikoon. | Stimulant, used in rheumatic cases. |
| 259 | Carrot Seeds. | Kaujar Verei. | Tonic. |
| 260 | Shulgum Verei. | Shulgum Verei. | Tonic. |
| 261 | Kaugoo Seeds. | Kaughoo Verei. | Refrigerant. |
| 262 | Kasoos. | Kasoos. | Do. |
| 263 | Kavoonvalaw. | Kavoonvalaw. | Stimulant. |
| 264 | Kilioorum puttay. | Killioorum puttay. | Used in headache in the form of liniment. |
| 265 | Kittoomee root. | Kittoomee Vayr. | Refrigerant. |
| 266 | Koobabanooshaw. | Koobabanoosha. | Do. |
| 267 | Kolamookoo chuckkay. | Kolamookoo chukkay. | Antibilious, alterative. |
| 268 | Kothalankai. | Kothalankai. | Alterative, stimulant. |
| 269 | Kundooparanghy. | Kundooparanghy. | Stimulant. |
| 270 | Kunnikoomary kalangoo. | Kunnikoomary kalangoo. | Refrigerant. |
| 271 | Kuppajee. | Kuppajee. | Do. |
| 272 | Kukkoopalay. | Kukkoopaulay. | Expectorant. |
| 273 | Kittoomee | Kittoomee. | Refrigerant, |
| 274 | Lichen rotundatus. | Kulpasee. | Do Tonic. |
| 275 | Limonia pentaphylla bark. | Kongee puttay. | Astringent used in diarrhœa. |
| 276 | Lavender flower. | Woosthacathoos. | Aromatic. |

| | | | |
|---|---|---|---|
| 277 | Linum usitatissmum, Linseed. | Alli Verei. | Demulcent. |
| 278 | Load stone flat. | Palavacanthum. | Tonic, diuretic. |
| 279 | Lodoicea Sechellarum. | Kadul thankai. | Used in rheumatism. |
| 280 | Lawsonia Inermis Seeds. | Aloovunna Verei. | Tonic. |
| 281 | Do root. | Do Vayr. | Do |
| 282 | Maroolmathangy. | Maroolmathangy. | Do |
| 283 | Mallows, kind of | Toothala Sookkoo. | Expectorant stimulant. |
| 284 | Melastoma aspera. | Kaſttoo Kadalie. | Said to ease Coughs. |
| 285 | Macis Mace. | Jauputhere. | Aromatic, stomachic. |
| 286 | Mace Wild. | Kautoo Jauputhere. | Laxative, used in rheumatism. |
| 287 | Myrrh. | Balanthra polum. | Emmenagoge, used in cases of scanty local discharge. |
| 288 | Mango bark. | Mamputtay. | Astringent. |
| 289 | Mampatchy. | Mampatche. | Carminative. |
| 290 | Mathanmusthoo. | Mathan mustoo. | Tonic. |
| 291 | Maratia mooghoo. | Maratia mooghoo. | Tonic, narcotic. |
| 292 | Melia azadirachta, Morgosa bark. | Vappam puttay. | Febrifuge, used in Amenorrhœa and Rheumatism. |
| 293 | Do Seeds. | Vappam Verei. | Do do do |
| 294 | Do Gum. | Do pisin. | Alterative. |
| 295 | Melissa officinalis. | Kunjang kora. | Expectorant, febrifuge, Stomachic. |
| 296 | Mierchukky. | Mierchukky. | Used as decoction in cases of fever. |
| 297 | Mimusops elengi flour. | Makidum poovoo. | Stimulant. |
| 298 | Mimosa bark. | Seekaram puttay. | Refrigerant. |
| 299 | Do Ferruginea. | Vilva puttay. | Astringent. |
| 300 | Do Cineria root. | Vadathary Vayr. | Used in rheumatism. |
| 301 | Do Sensitiva. | Thottasiningee. | Stimulant. |
| 302 | Do Triquetra flower. | Summunge poovoo. | Refrigerant. |
| 303 | Mimosa. | Eávayr. | Expectorant. |
| 304 | Mimusops hexandra wood. | Paulakuttay. | Stimulant. |
| 305 | Do fruit. | Paulakai. | Stomachic. |
| 306 | Monetia Barleriodes root. | Sungum Vayr. | Used in rheumatism. |
| 307 | Moringha. | Thavasoomooringa. | Stimulant. |
| 308 | Do bark. | Mooroonga puttay. | Do |
| 309 | Menispermum Cordifolium. | Seenthe Cody. | Refrigerant. |
| 310 | Memordica dioica. | Padoopauval Cody. | Laxative. |
| 311 | Mookathary Puttay. | Mookathary puttay. | Used in rheumatism. |
| 312 | Moollishonay root. | Mullishony kalungoo. | Used in rheumatism. |
| 313 | Mucuna porrita fruits. | Kara palum. | Laxative. |
| 314 | Do bean. | Kara Kai. | Astringent. |
| 315 | Myrobalan Chebulic. | Kadoocai. | Laxative, astringent. |

## VEGETABLE DRUGS.—*(Continued)*

| No. | Latin or English Name. | Native Name. | Remarks. |
|---|---|---|---|
| 316 | Myrobalan Chebulic, kind of | Kabool Kadoocai. | Laxative, astringent. |
| 317 | Do Belleric. | Thanicai. | Do |
| 318 | Do Emblic, Seeds of | Nelli Verei | Refrigerant. |
| 319 | Mythalukkady. | Mythalukkady. | Used as anodyne application. |
| 320 | Morinda umbalata bark. | Nona puttay. | Alterative, used in cases of boils. |
| 321 | Mysatchy. | Mysatchy. | Used as anodyne application. |
| 322 | Myrrh Seeds. | Myrrh Verei. | Used in hæmorrhoids. |
| 323 | Naroopaithan plant. | Naroopaithan Cody. | Antibilious. |
| 324 | Narooli kai. | Naroolikai. | Tonic. |
| 325 | Nerium antedy-sentericum. | Veppala arisee. | Stimulant, used in diarrhœa. |
| 326 | Do bark. | Veppala puttay. | Do |
| 327 | Nelumbum Speciosum root. | Thamara Kalungoo. | Refrigerant. |
| 328 | Do flowers. | Do poovoo. | Do |
| 329 | Do Seeds. | Do Verei. | Antibilious. |
| 330 | Nepeta malabarica. | Peimiruttie. | Used in diarrhœa and indigestion. |
| 331 | *Nelumbium root.* | Vuttathee Vayr. | Antibilious. |
| 332 | Nirveshum. | Nirveeshum. | Used as antidotes in cases of Poison. |
| 333 | Nigella Sativa. | Karoonjeeragum. | Carminative. |
| 334 | Nymphœa Odorata. | Allikalungoo. | Refrigerant, used in Gonorrhœa. |
| 335 | Nux moschas, nutmeg. | Jathikai. | Stimulant, Tonic, Astringent. |
| 336 | Ocimum Sanctum. | Tholase Verei. | Cooling. |
| 337 | Do Album. | Kunjan kora. | Used in fever, diarrhœa and chest affections. |
| 338 | Do Hirsutum, rough basil. | Koolimittan Vayr. | Refrigerant. |
| 339 | Do Sanctum, black. | Karoonthoolasee. | Used in fever. |
| 340 | Do Basilicum. | Sooreakeranthee. | Tonic. |
| 341 | Ooppoola *plant.* | Ooppoola Cody. | Used in tympanitis and looseness of bowels. |
| 342 | Opium. | Abinee. | Narcotic. |
| 343 | Odina pumata, | Votheum puttay. | Refrigerant. |
| 344 | Orange peel. | Kitchlee thole. | Aromatic. |
| 345 | Orchis mascula, Salep. | Salamisery. | Tonic. |
| 346 | Papaver Somniferum Seeds. | Kassa Kassa. | Narcotic, Astringent and Cooling. |
| 347 | Do. do Capsules | Do Thole. | Its decoction is used as anodyne fomentations. |
| 348 | Pavonia Zeylanica. | Sittamoottee. | Tonic. |

| | | | |
|---|---|---|---|
| 349 | Pavonia Zeylanica root. | Sittamoottee Vayr. | Febrifuge. |
| 350 | Do Odorata. | Paramoottee. | Ditto. |
| 351 | Pavetta Indica. | Pavetta Vayr. | Tonic, allays thirst. |
| 352 | Phyllanthus Rhamnoides. | Pavala poolu. | Used in discussing tumours. |
| 353 | Pepper Corn, kind of | Voivelungum. | Used in Rheumatism. |
| 354 | Do plant, its branches. | Thippile Cuttay. | Tonic, Aromatic. |
| 355 | Do white. | V[illegible] molagoo. | Carminative, Refrigerant. |
| 356 | Do wild. | Kattoo molagoo. | Refrigerant. |
| 357 | Pedalium murex. | Auna nerringee. | Diuretic. |
| 358 | Periploca. | Ammayar coonthul. | Do. |
| 359 | Do Indica, Sarza. | Nunnaree Vayr. | Alterative. |
| 360 | Do Sylvestris. | Sirroocoorinjan. | Good Febrifuge. |
| 361 | Peruppan Kalang. | Peruppan Kalungoo. | Used in Rheumatism. |
| 362 | Bisfaej. | Bisfaej. | Tonic, Refrigerant. |
| 363 | Peysoorakody. | Peysoora kody. | Expectorant. |
| 364 | Phyllanthus emblica. | Nellee Kai. | Antibilious |
| 365 | Do niruri. | Keela nellee. | Used in jaundice. |
| 366 | Do do same as | Mala nellee. | Antibilious. |
| 367 | Do Maderaspatensis. | Nelakadumba Kalungoo. | Alterative. |
| 368 | Pharnaceum mollugo. | Thoora elay. | Stomachic, Aperient, Antiseptic. |
| 369 | Do do | Do lubbay. | Do do do. |
| 370 | Do Cerviana. | Purpadagam. | Febrifuge, diaphoretic, expectorant, antibilious. |
| 371 | Phlomis Indica. | Thoomba Vayr. | Febrifuge, expectorant. |
| 372 | Physalis Flexuosa. | Amookanang Kalungoo. | Used in Rheumatic cases |
| 373 | Do root surat. | Soorathoo do do | Do |
| 374 | Do pubescens root. | Segappoo manathacaly Vayr. | Alterative, refrigerant. |
| 375 | Phœnix farinifera, gum. | Eachum pisin. | Used in cases of scanty Lochial discarge. |
| 376 | Pimpenella anisum, aniseed. | Somboo. | Aromatic, carminative. |
| 377 | Piper longum, elephant pepper. | Auna thippelee. | Carminative. |
| 378 | Do Cubeba, cubebs. | Vaul molagoo. | Do refrigerant. |
| 379 | Do Nigrum. | Sheveum. | Laxative, stomachic. |
| 380 | Pistacia lentiscus, mastiche, | Roomimustaky. | Tonic. |
| 381 | Pillanthe root. | Pillanthee Vayr. | Tonic. |
| 382 | Psoralia carylo-folia. | Carpôga arisee. | Used in skin diseases. |
| 383 | Plantago ispaghula. | Spogal Verei. | Demulcent, refrigerant. |
| 384 | Plumbago Zeylanica. | Sithramoolum. | Stimulant, Vesicatory. |
| 385 | Pyrus cydonia, Quince seeds, | Beydana. | Refrigerant, used in Catarrh and Dysentry. |
| 386 | Pterocarpus marsupium. | Vootheravânga puttay. | Stimulant, Alterative. |
| 387 | Prosopis spicigera bark, | Vunni puttay. | Stimulant. |

## VEGETABLE DRUGS.—*(Continued.)*

| No. | Latin or English Name. | Native Name. | Remarks. |
|---|---|---|---|
| 388 | Poligonum barbatum. | Alary Vayr. | Used externally in cutaneous diseases. |
| 389 | Parunghi mooshuk. | Parunghi mooshuk. | Stimulant. |
| 390 | Partulaca quadrifida. | Passala Keeray. | Its juice used externally in erysipalas, Diuretic. |
| 391 | Pterocarpus santalinus. | Segappoo sunthanum. | Carminative. |
| 392 | Punica granatum seeds. | Mathalum Verei. | Refrigerant. |
| 393 | Psychotis. | Isbunth. | Used in cases of dyspepsia. |
| 394 | Putchay leaves. | Putchay elay. | Used in skin diseases. |
| 395 | Puttirasum seeds. | Patherasam Verei. | Stimulant. |
| 396 | Papetha. | Santhanasoo cottay | Astringent, used in cholera. |
| 397 | Quercus infectoria. | Mausukkai. | Astringent, much used in Children diseases. |
| 398 | Rape seeds, wild. | Kattoo elloo. | Used in eye diseases externally. |
| 399 | Raphanus Sativus seeds. | Moollunge Verei. | Diuretic. |
| 400 | Premna integre-folio. | Monnee Vayr. | Cordial, Stomachic. |
| 401 | Raisins. | Seemay elanthum palum. | Refrigerant. |
| 402 | Resin black. | Karoopoo Koongilium. | Do. |
| 403 | Rheum palmatum. | Variathoo Kalungoo. | Purgative, Astringent. |
| 404 | Rhubarb kind of. | Rehvin katai. | Do. |
| 405 | Rosa. | Punneerpoo or Goolaboopoo. | Refrigerant. |
| 406 | Rubia munjista. | Munthitti Vayr. | Used in rheumatic cases. |
| 407 | Ruellia Strepens. | Kirendynaiagum. | Applied in cases of eruptions consequent on teething. |
| 408 | Sandal powder. | Santhana thool. | Carminative. |
| 409 | Santalum album. | Do Cuttay. | Do Tonic. |
| 410 | Sanseviera zeylanica. | Marool Kalangoo. | Used in hæmorrhoids. |
| 411 | Sage leaves. | Sage elay. | Its infusion used as a gentle tonic and stomachic. |
| 412 | Samakoothanah. | Samakoothanah. | Carminative. |
| 413 | Salep punja. | Punjah Salamisiree. | Tonic. |
| 414 | Do Neilgherries. | Neilagherry Salamisiree. | Tonic. |
| 415 | Saujeraw. | Saujeeraw. | Carminative. |
| 416 | Senna folio. | Soorathoo nelavaray. | Purgative. |
| 417 | Saravattoo mootharz. | Saravattoo mootharj. | Laxative. |
| 418 | Piper Dichotomum. | Thasavarum. | Used in fevers and dyspeptic complaints. |
| 419 | Sadaputhee. | Sadaputhee. | Alterative. |
| 420 | Sabina folio. | Sabina elay. | Stimulant. |

| | | | |
|---|---|---|---|
| 421 | Senna folia, country. | Nautoo Neelavaray. | Purgative. |
| 422 | Semecarpus anacardium. | Sayng Cottay. | Stimulant used in paralysis. |
| 423 | Scopolea aculeata. | Moolacarana puttay. | Stimulant. |
| 424 | Do | Kotta carana. | Used in hæmorroids. |
| 425 | Shell lac. | Avool aruckoo. | Used as liniment in cases of paralysis. |
| 426 | Sison ammi, Bishopsweed seed. | Womum. | Carminative Stimulant. |
| 427 | Do Surat. | Ajumatha Womum. | Do |
| 428 | Sida mauritiana, Mallow seeds. | Thoothee Verei. | Refrigerant. |
| 429 | Do root. | Thoothee Vayr. | Do |
| 430 | Do Lanceolata. | Malathangy Vayr. | Used in rheumatic cases. |
| 431 | Sirrookalurva bark. | Sirrookalurva puttay. | Do |
| 432 | Sirroonaugappoo. | Sirroonaugappoo | Astringent. |
| 433 | Strychnos potatorum. | Tatang Cottay. | Diuretic. |
| 434 | Do nuxvomica. | Yetty Cottay. | Used in rheumatic cases. |
| 435 | Do bark. | Do puttay. | Stimulant. |
| 436 | Do root. | Do Vayr. | Do |
| 437 | Do potatorum fruit. | Tettam palum. | Do |
| 438 | Styrax Benzoin, Benzoin. | Sambranee. | Used in rheumatism. |
| 439 | Stroemia tetrandra. | Veelevayr. | Purgative. |
| 440 | Smilax China. | Paranghy Chukkay. | Tonic, used in rheumatism, alterative. |
| 441 | Do pseudo, China root. | Sirrookuttoo Cody. | Alterative. |
| 442 | Barleria prionitis. | Semmoollee elay. | Used in catarrhal affections of children. |
| 443 | Soda Carbonas, Impura. | Pooneeroo. | Used in combination with other medicines. |
| 444 | Allium sativum. | Vellapoondoo. | Stimulant, used in paralytic and rheumatic affections. |
| 445 | Solanum Jacquini seeds. | Kundungkuttire Verei. | Used in Gastritis. |
| 446 | Do root. | Do Vayr. | Do |
| 447 | Do pubescens root. | Soondacai Vayr. | Stimulant. |
| 448 | Do Nigrum root. | Manathacale Vayr. | Refrigerant. |
| 449 | Do Indicum. | Sirroovashuthalie Vayr. | Used in rheumatism and in head and chest affections. |
| 450 | Do Trilobatum. | Thoothoovala Vayr. | Stimulant. |
| 451 | Do Nigrum Seeds. | Manathacalee Verei. | Refrigerant. |
| 452 | Spermacoce Hispida, Seeds. | Nuttachooree Verei. | Alterative. |
| 453 | Do root. | Do Vayr. | Do |
| 454 | Sphæranthus Zeylanicus. | Sivakeranthe Vayr. | Used in fever and Cutaneous diseases. |
| 455 | Do indicus. | Kottan Karanthay. | Alterative. |
| 456 | Sorrel, a kind of | Pooleearana. | Used in hæmorroids. |
| 457 | Suksthra bathee. | Suksthra bathee. | Do fever, stimulant and expectorant. |
| 458 | Soorinjan. | Soorinjan. | Do Rheumatic Cases. |
| 459 | Tarunj akruby. | Tarunj akruby. | Tonic. |

## VEGETABLE DRUGS.—*(Continued.)*

| No. | Latin or English Name. | Native Name. | Remarks. |
|---|---|---|---|
| 460 | Terminalia chebula. | Kadookai pingee. | Astringent. |
| 461 | Do alata. | Maroothum puttay. | Used in diabetes. |
| 462 | Terminalia chebula flowers. | Kadoocai poovoo. | Astringent, expectorant, febrifuge. |
| 463 | Do species of. | Munnoothe kadookai. | Do Laxative. |
| 464 | Thorn apple flower. | Voomathum poovoo. | Narcotic. |
| 465 | Tormentile root. | Tormentile Vayr. | Astringent, used in diarrhæa and chronic dysentery. |
| 466 | Thorn bush, roots of | Vara moollee. | Diuretic. |
| 467 | Tamarindus indica, bark. | Pooleum puttay. | Stimulant. |
| 468 | Tribulus Terristris. | Sirrooneringee. | Diuretic. |
| 469 | Tricosanthes Lacimosa. | Peypoodal. | Used to suppress Vomiting. |
| 470 | Tricosanthes. | Kakkanutchoo. | Used in cases of retention of urine. |
| 471 | Do palmata root. | Savare Kalungoo. | Antibilious. |
| 472 | Do fruit. | Savare Kai. | Antibilious. |
| 473 | Tricosanthes Incisa. | Sirroocorutta. | Poison. |
| 474 | Trajia Cannabina. | Poonacanchooree. | Febrifuge. |
| 475 | Do. | Sirroocanchooree. | Do. |
| 476 | Nicotiana Tabaccum seeds. | Poogaelay Verei. | Narcotic. |
| 477 | Turmeric. | Kuppoomunjul. | Stimulant. |
| 478 | Trophis aspera. | Perayam Verei. | Used in rheumatism. |
| 479 | Trianthema monogynia. | Vellacharana Vayr. | Do. |
| 480 | Turmeric, species of | Sunni puttay. | Stimulant. |
| 481 | Valeriana Jatamansi. | Jadamangee. | Carminative, Febrifuge used in diarrhæa. |
| 482 | Vaululoovay seed. | Vaulooloova Arisee. | Used in Diarrhæa and in amenorrhæa. |
| 483 | Vannilla root. | Vanilla Vayr. | Aromatic, Stimulant. |
| 484 | Vaymbadum bark. | Vaymbadam puttay. | Used in Cutaneous affections. |
| 485 | Vernonia anthelmintica. | Kautoo Seeragum. | Used in Leprosy do |
| 486 | Veratrum album. | Pither roganee. | Used as Collyrium. |
| 487 | Vilamitcha Vayr. | Vilamitcha Vayr. | Antibilious. |
| 488 | Velary root. | Velary Vayr. | Used in rheumatic cases. |
| 489 | Vellerkoo. | Vellerakoo. | Alterative. |
| 490 | Viola suffrenticosa. | Orilathamaray. | Refrigerant, Tonic. |
| 491 | Vitex Negundoo. | Nochili. | Used in cases of tympanitis. |
| 492 | Injaruth. | Injaruth. | Used in combination with plasters. |

| | | | |
|---|---|---|---|
| 493 | Vootungan. | Vootungan. | Tonic. |
| 494 | Xantheum orientale root. | Maroovoomatha Vayr. | Narcotic. |
| 495 | Serpentaria. | Snake root. | Stimulant tonic, Diaphoretic, and emmenagogue. |
| 496 | Sinapis album. | Venkadoogoo. | Stimulant. |
| 497 | Olibanum Galbanum. | Olibanum Galbanum. | Do chiefly used in plasters and as fumigation. |
| 498 | Barishmiun. | Barishmiun. | |
| 499 | Canella alba. | Canella puttay. | Aromatic, Stimulant. |
| 500 | Quercus cortex. | Oak bark. | Astringent. |
| 501 | Cinchona oblongifolia. | Seema Vapum puttay. | Febrifuge, Tonic. |
| 502 | Menispermum Cocculus. | Kakkakolli Verei. | Narcotic, applied externally in cases of inveterate itch. |
| 503 | Cascarilla bark. | Cascarilla bark. | Tonic. |
| 504 | Toothali Suffed. | Toothale suffed. | Refrigerant. |
| 505 | Cotton seeds. | Paroothee Verei. | Astringent. |
| 506 | Colchicum seeds. | Colchicum Verei. | Nauseant, cathartic, diuretic, and diaphoretic. |
| 507 | Senega root. | Senega Vayr. | Stimulant, expectorant, diaphoretic and emetic. |
| 508 | Bergeræ Kænigii. | Karoovâpilay. | Stomachic, tonic and stimulant. |
| 509 | Asclepias volubilis. | Kodee paulay. | Diuretic, emetic. |
| 510 | Lawsonia spinosa. | Maroodanie. | Used in cases of lepra. |
| 511 | Sinapis. | Kadoogoo. | Emetic, stimulant. |
| 512 | Subja seeds. | Subja Verei. | Cooling. |
| 513 | Carraway seeds. | Seemay Somboo. | Carminative, diuretic. |
| 514 | Cummin seed black. | Karoonjeeragam. | Refrigerant. |
| 515 | Colchicum Corns. | Colchicum poovoo. | Diuretic and diaphoretic. |
| 516 | Pimenta. | Pimenta. | Stimulant aromatic. |
| 517 | Linseed. | Aulee Verei. | Demulcent, Tonic. |
| 518 | Cucumis seed. | Soray Verei. | Diuretic, Tonic. |
| 519 | Pepper longum. | Tippilee. | Stimulant. |
| 520 | Anise seed. | Somboo. | Carminative, |
| 521 | Jalap root. | Seemay Sivatha Vayr. | Purgative. |
| 522 | Ponga puttay. | Pongaputtay. | Tonic. |
| 523 | Pavukkah root. | Pavukka Vayr. | Alterative. |
| 524 | Nauga puttay. | Nauga puttay. | Astringent. |
| 525 | Moollilavam root. | Moollelavam Vayr. | Do. |
| 526 | Kottam kody. | Kottam Cody. | Used in Rheumatism. |
| 527 | Ponnakutty. | Ponnakutty. | Used in cutaneous diseases. |
| 528 | Sirroovilam vayr. | Sirroovelam Vayr. | Do Antibilious. |
| 529 | Sida Lanceolata. | Malathanghy Vayr. | Refrigerant. |
| 530 | Solanum indicum. | Moolli Vayr. | Diuretic. |
| 531 | Eruttie peramuttie. | Eruttie Peramuttie. | Used in Diarrhæa and Dysentery. |

| No. | Latin or English Name. | Native Name. | Remarks. |
|---|---|---|---|
| 532 | Batharingeboya. | Batharingeboya. | Carminative, alterative. |
| 533 | Sevvelly. | Sevvullee. | Used in leprosy, psoriasis, and in hæmorrhoids. |
| 534 | Putcharay elay. | Putcharay elay. | Diuretic. |
| 535 | Kottisanthoo. | Kotti Santhoo. | Refrigerant. |
| 536 | Valerian root. | Valeriam Vayr. | Stimulant. |
| 537 | Mezereon root. | Mezerian Vayr. | Epipastic, stimulating diaphoretic and diuretic. |
| | | 8849 *Mineral Drugs.* | |
| 538 | Stibium, antimony. | Soorma or Unjanakul. | Used as an emetic and as collyrium. |
| 539 | Amber. | Umber. | Stimulant. |
| 540 | Do burut. | Sootta amber. | Do. |
| 541 | Do | Sany amber. | Do. |
| 542 | Ambergris. | Min amber. | Do. |
| 543 | Arsenicum flavum, sulphuret of arsenic. | Auritharum. | Used to check obstinate intermittent fevers and in Glandular complaints, in apoplectic attacks, and in certain Leprous affections. |
| 544 | Do auripigmentum. | Ponnaritharum. | |
| 545 | Do Oxydum album. | Vellapashanum. | |
| 546 | Arsenicum yellow, sulphuret of | Thalagam. | Do do |
| 547 | Do Rubrum. | Kootherapaul pashanum. | Do do |
| 548 | Do Orpiment, a kind of | Seppoothotty pashanum. | Do do |
| 549 | Do a kind of | Manoselay. | Do do |
| 550 | Bole Armenian China. | Seemay Kaviceulloo. | Refrigerant. |
| 551 | Do Country. | Nauttoo do. | Do |
| 552 | Bismuth. | Vungala nemalay. | Tonic. |
| 553 | Borax. | Venkarum. | Diuretic. |
| 554 | Calciscarb, chalk. | Seema Choonnamboo. | Astringent. |
| 555 | Alumen. | Padikarum. | Do diuretic. |
| 556 | Copper, acetate of | Paulthoothum. | Do Tonic. |
| 557 | Do blue carbonate of. | Lalajavurthoo. | Carminative, used with other drugs. |
| 558 | Coral. | Pavalum. | Tonic. |
| 559 | Do its branches. | Pavalakkody. | Do |
| 560 | Cidiaris. | Asuralivooth. | Used in Tetanus, Tonic, Stimulant. |
| 561 | Cinnabar, manufactured. | Lingum. | Used in fever and Rheumatism. |

| | | | |
|---|---|---|---|
| 562 | Soap earth. | Pooneeroo. | Diuretic. |
| 563 | Fel Vitri. | Valiclooppoo. | Carminative. |
| 564 | Copper, sulphate of | Thoothum. | Tonic, astringent. |
| 565 | Copaul-gum. | Karoobaw. | Do astringent. |
| 566 | Hydrargyri bichloridum. | Suvveerum. | Purgative, used in rheumatism. |
| 567 | Jarmohora. | Jarmohora. | Tonic. |
| 568 | Inkilikum. | Inkilikum. | Stimulant. |
| 569 | Asbestos. | Kulnar. | Tonic, refrigerant. |
| 570 | Asphaltum. | Mommayee. | Used as anodyne to painful parts. |
| 571 | Gypsum. | Kurpooraselasithoo. | Refrigerant, Tonic. |
| 572 | Kashi Noray. | Kashi Noray. | Diuretic. |
| 573 | Lead. | Kareeum. | Employed in glazing porcelain white. |
| 574 | Load stone flat. | Palavacanthum. | Tonic. |
| 575 | Lime stone. | Sookkan culloo. | Expectorant. |
| 576 | Iron, sulphate of | Annabathee. | Tonic. |
| 577 | Rock salt | Inthuppoo. | Carminative. |
| 578 | Red *precipitate, Native* preparation. | Rassasendooram. | Used as Calomel. |
| 579 | Rassacurpooram. | Rassacurpooram. | A sort of muriate of mercury, used in Leprosy. |
| 580 | Sulphur. | Kenthagum. | Used in Cutaneous diseases and rheumatism, refrigerant. |
| 581 | do purified | Soothe Kenthagum. | Do do |
| 582 | Sungoo ashum. | Sungoo ashum. | Tonic. |
| 583 | Palakaroodakul. | Palakaroodakul. | |
| 584 | Nauganum. | Nauganum. | Used as Liniment in headache. |
| 585 | Zinc, sulphate of | Sathy paul thoothum. | Tonic, astringent. |
| 586 | Soap earth, a kind of | Appilakarum. | Containing saltness or acidity mixed with sharpness. |
| 587 | Borax, Oil. | Yennavenkarum. | Diuretic. |
| 588 | Letharge. | Meerootharsing. | Used in making plasters. |
| 589 | Salt, black. | Caroopoo Oppoo. | Carminative. |
| 590 | Potassa Nitras. | Potoolooppoo. | Diuretic, refrigerant. |
| 591 | Onyx. | Komathaga selasittoo. | Refrigerant. |
| 592 | Sathanuj. | Sathanuj. | Astringent, Tonic. |
| 593 | Mica. | Appragum. | Used in Diabetes, Tonic. |
| 594 | Do of yellow colour. | Yema Appragum. | Do do. |
| 595 | Do of black colour. | Kistna Appragum. | Do do. |
| 596 | Magnetic Iron Stone. | Kul Kaunthum. | Used in Anæmia and Gastritis. |
| 597 | Sal Ammoniac. | Navacharum. | Stimulant. |
| 598 | Zinc. | Naugam. | Used in Opthalmia as an Ointment. |
| 599 | Lead, red oxide of | Eeasendoorum. | Used in making plasters. |
| 600 | Boothathumberan, | Boothathumberan, | Given after childbirth to bring out the lochial discharge freely. |

| No. | Latin or English Name. | Native Name. | Remarks. |
|---|---|---|---|
| 601 | Alumen plumosum. | Kulmathum. | Refrigerant, diuretic. |
| | | 8850 *Animal drugs.* | |
| 602 | Bezoar, Cow. | Mairmaniccum. | Used in the form of Liniment to make hairs grow. |
| 603 | Bombyx, Silk worm. | Puttoopoochee. | Stimulant, used as decoction. |
| 604 | Calculus Cisticus (Bovis.) | Korôshanum. | Do Febrifuge. |
| 605 | Do do (Camelinus.) | Woonda korôsanum. | Febrifuge. |
| 606 | Coccus Cacti. | Cochineal Pooche. | Astispasmodic, anodyne. |
| 607 | Lacca, Lac. | Kombarackoo. | Its decoction given to suppress hœmorrhage. |
| 608 | Musk. | Kustooree. | Stimulant, astispasmodic. |
| 609 | Peacock's feather. | Mayileragoo. | Its decoction used to suppress Vomiting. |
| 610 | Meconium, young Camel's. | Rassavuttoo. | Used as an application in cases of Ophthalmia, and internally to ease cough. |
| 611 | Turtle's shell. | Amay Odoo. | Used in children's diseases with other decoctions. |
| 612 | Silk-worm's nests. | Puttoo poocheekoondoo. | Said to be tonic, used with electuaries. |
| 613 | Lizard species of | Ragoomayee. | Used by Mahomedan hakums as a good tonic in cases of debility and impotence, broken up, in combination with other electuaries—said to be exported from Arabia. |
| 614 | Mylabris cichorei. | Vundoo poochee. | Excellent substitute for the Spanish fly. |

THE HONORABLE WALTER ELLIOT, ESQ., Exhibitor.

*Articles in bronze.*

8867 2 Vases on marble pedestals.
8868 2 Horses.
8869 Dog and Tortoise.
8870 2 Tazzas.
8871 Figure of Spanish Dancer.
8872 Vase on Marble Stand.
8873 Do with Top.

---

8874 Horn of the African Rhinoceros (*R. Simois*) carved in China.

*Crania.*

8875 2 Elephants.
8876 2 Wild Buffaloes.
8877 2 Bisons.
8878 Rhinoceros with Horns.
8879 Hippopotamus.

---

Messrs. ASHTON, RICHARDSON AND CO., Exhibitors.

*Vizagapatam Articles.*

| | | | |
|---|---|---|---|
| 8880 | 4 Glove Boxes | each | Rs. 3. |
| 8881 | 3 Cribbage Boards | do | Rs. 4-4. |
| 8882 | Horn letter file | | Rs. 14. |
| 8883 | 2 Horn Inkstands with Bottles | ea. | Rs. 10. |
| 8884 | Do do | do | Rs. 9. |
| 8885 | 2 Do Work Boxes | ea. | Rs. 12. |
| 8886 | 3 Fancy Card Boxes | do | Rs. 3. |
| 8887 | 2 Horn do do | do | Rs. 2. |
| 8888 | Do do do | | Rs. 2-12. |
| 8889 | Do do do | | Rs. 2. |
| 8890 | 3 Fancy Paper weights | ea. | Rs. 2. |
| 8891 | 2 Do Cigar Cases | do | Rs. 2-8. |
| 8892 | 5 Do Card Cases | do | Rs. 2. |
| 8893 | 3 Do do do | do | Rs. 1-8. |
| 8894 | 1 Horn Paper Cutter | | Rs. 1.4. |
| 8895 | 4 Sandlewood do | ea. | As. 8 |
| 8896 | 2 Horn Round Roolers | ea. | As. 12 |
| 8897 | 1 Do Work Basket | | Rs. 10. |
| 8898 | 2 Fancy do do | each. | Rs. 10. |
| 8899 | 3 Do do do | do. | Rs. 12-12 |
| 8900 | 2 Do do do | do. | Rs. 10-12 |

---

S. AUTHIAH CHITTY, Exhibitor.

9029 Silver fish and plate Rs. 100.
9030 Diamond Ring „ 70.

---

Conductor G. STEVENSON, Gun Carriage Manufactory, Exhibitor.

9031 Carriage Iron for Howitzer iron 10 inch, Major Maitland's pattern, with the following articles belonging to the Carriage.
1 Howitzer Iron N. C. 10 inch.
1 Scale Tangent Howr. iron N C 10 in.
1 Hammer Percussion Howr. 10 inch.
1 Handspike Traversing Howr. 10 inch.

KRISTNEMAH ACHARY, Jeweller, Vellore, Exhibitor.

9032 *Articles of Jewellery.*

2 Muffineers Rs. 25 each or pair Rs. 45.
Porte Bouquet Rs. 35.
Silver gilt brooch Rs. 7.
Silver brooch Rs. 4-8.
2 Elephant hair rings each Rs. 4-8.

---

MR. P. A HUNT, American Mission Press, Exhibitor.

9033 Specimen of Gum Hog from South America.

*(The Exhibitor is desirous of knowing whether this article can be obtained in India. Any communication on this subject may be addressed to him direct, or to the Secretary of the Local Committee.)*

---

VENKATARAMANIAH GAROO, Zemindar of Thathavally Moottah, Exhibitor.

*Grains.*

9034 Thella Cundooloo (in one case)
9035 Chittrala Cundooloo.
9036 Nulla Cundooloo.
9037 Apeny or Opium 16 Rs. weight Rs. 5
9038 Gums (in two tin cases)
9039 2 Stones.

*Oils.*

9040 Gingelly Oil, 7 Viss, Rs. 20
9041 Yelooppay Oil, 6 Viss, Rs. 15
9042 24 Cocoanuts.

---

THE SECRETARY OF THE MILITARY FEMALE ORPHAN ASYLUM, Exhibitor.

9043 *Specimens of needle work, done by the Girls of the M. F. O. Asylum.*

Child's frock embroidered Rs. 30.
Embroidered collar } Sold to Mrs.
Pair of sleeves } J. BinnyKey, Rs. 35.
Bands for ditto. }

---

C. COOMARASWAMY MOODELLIAR, Exhibitor.

9044 Silver Hookah bottom complete, Containing 6 Pieces viz., bottom, neck, chillumbee, 2 covers for ditto and Naicha, Rs. 150.

---

CAPTAIN W. BAKER, Exhibitor.

9045 Silver model of the Madras Lighthouse made by Sawmy Maistry of Vellore. The four corner pedestals, and the base of the column are boxes to con-

tain spices ; and the column itself is a nutmeg grater.

9346 Lamp & 3 Reflectors for Santapilly Light house *(from the Madras Arsenal.)*

---

GOORRUM VENKANNA SASTROOLOO, Exhibitor.

9047 4 Chess Boards (Silk) of 64 Squares showing consecutive moves of the Knight so as to cover each square once, and none twice, Rs. 35 each.

---

JOHN TAWSE, ESQ., Exhibitor.

9048 Photograph Portrait of Lieut. Colonel W. Pitt Macdonald.

---

W. B. NORFOR, ESQ., Exhibitor.

9049 Irrigating Machine.

---

P. MOOROOGASAM, Draughtsman, Medical College, Exhibitor.

9050 Portrait drawn by Exhibitor.

---

ANNASAWMY, Assistant Artificer, Medical Stores, Exhibitor.

9051 Lancet made by Exhibitor.

---

Mr. J. DESCHAMPS, Exhibitor.

9052 Ivory Davenport, lined with Sandalwood and Satinwood made at Vizagapatam by order of Government.

---

T. C. STREENEVASA PILLAY, Exhibitor.

9053 One Rajah's Swinging Car or Rathavoonjul including Images of 4 Hindoo Rajahs, Viz.

Nawab.
Vieramaditta Rajah.
Salevahana Rajah.
Sevoghee Maharajah and of the Royal Consorts of different Rajahs.
For Sale Rs. 50-6-8.

---

Mr. B. ROSS, Exhibitor.

9054 Fancy beetle wing tinsel dress border manufactured at Aurungabad, Rs. 25.

---

T. L. R. SHAND ESQ., Exhibitor.

9055 Pair Buffaloe horns.

---

Major BOILEAU, Engineers, Exhibitor.

9056 Model of a moveable dam.

Lieut. A. S. MOBERLEY, Exhibitor.

9057 Model of a proposed Sluice gate for Head Sluices for channels.

*The following extract from Lieut. Moberley's letter will furnish the best explanation.*

*"If the Head Sluice should have an opening of only 3 feet one gate would suffice at each end.*

*"Having often observed the difficulty that exists in lifting up the pieces of wood that are now used and which are kept in their position by Beam Stones crossing over from one Pier to another, and also the obstruction that these Stones cause to the free flow of the water. Captain Heathorn and I, when on a tour of Inspection together a short time ago, talked the subject over. The accompanying Drawing shews what Captain Heathorn proposed and the Model is proposed by myself as an improvement on Captain Heathorn's plan, having I conceive the advantage of furnishing greater water way.*

*"As both are extremely simple, I presume there is no need for a detailed explanation."*

---

W. B. WRIGHT, ESQ., Exhibitor.

9058 Specimens of Coke manufactured at the Railway Company's Ovens.

---

MAJOR T. A. JENKINS, Exhibitor.

9059 Model of yacht rigged, adapted for a length of from 30 to 40 feet.

9060 Lines of Do and of Canal Passenger Boat for India.

---

LIEUT. F. G. HANKIN, Asst. Engineer Godavery Division, Exhibitor.

9061 Resin prepared from the milk hedge (Enphorbia Tirucalli)

---

MRS. J. BINNY KEY, Exhibitor.

9062 Cameo Brooch of great antiquity having been upwards of a century in the possession of the family of an Italian Gentleman from whom it was purchased.

---

MAJOR J. MAITLAND, Exhibitor.

9063 American piage grown in the compound of the Gun Carriage Manufactory.

---

MESSRS. OAKES AND CO., Exhibitors.

9064 Harmonium with harmonics, stops 12, by Alexandre et Fils Rs. 600.

---

MRS. CRISP, Exhibitor.

9065 Petrified Grass from Sumatra.

MAJOR SIMPSON, Exhibitor.

9066 Chemical Balance. 16 Inch beam, to carry 6000 grains in each pan, and indicate the 3-1000 of a grain by "Liebhaber" Madras.

THE HON. WALTER ELLIOTT, ESQ., Exhibitor.

9067 Specimens of the National Arms of different Countries of India.

LADY MONTGOMERY, Exhibitor.

9068 Marabout feather Fan from Travancore.

Mr. G. J. LAFOND, Exhibitor.

9069 2 Frames of Photograph likenesses.

REV. E. PORTER, Exhibitor.

9070 *Articles from Cuddapah Mission School.*

| | | |
|---|---|---|
| Collar | Rs. | 3. |
| Do. | ,, | 1-12. |
| Lady's Sleeves | ,, | 4-8. |
| Do | ,, | 4-8. |
| Frock Body | ,, | 2. |
| Crochet Tidy | ,, | 2. |
| Do D'oyley | ,, | 2. |
| Model Cart | ,, | 1. |
| Model of a Country Cart | ,, | 1-8. |

Major T. A. JENKINS, Exhibitor.

9071 Saddle on improved principle.

W. E. UNDERWOOD, ESQ., Exhibitor.

9072 Sample of Arnee Muslin Rs. 700 the piece.

9073 14 Articles bought in London at one penny each.

C. V. CONNIAH CHETTIAR, Exhibitor.

9074 Fibre Cutting Machine.

9075 Circular Saw.

Captain W. E. BAKER, Exhibitor.

9076 Model of Tilt hammer *(Campbell Hammer.)*

G. LATHAM, ESQ., Exhibitor.

9077 Two perspective views of proposed public building for Telegraph Office. Post Office, and Public Rooms for Madras.

ABDOOL CAWDER, Exhibitor.

9078 Bottle containing two figures.

G. NARRAINSAWMY NAIDOO, Exhibitor.

9079 Pair Kachacada bangles Rs. 35.

W. J. ADDIS, ESQ., Exhibitor.

9080 Case of Minerals.

J. G. GARRETT, ESQ., Exhibitor.

*Photographs.*

9081 View from the Road at the back of the Club.

9082 Tippoo's Drop taken from Murdidroog.

9083 A Gateway and Cart.

P. SASHACHELLUM, Exhibitor.

9084 Box of Wontimitta Indigo.

MR. FRENCH, Exhibitor.

9085 *Specimens of Needlework from the Town Orphan Asylum.*

| | | |
|---|---|---|
| 1 Sofa Cushion, large | Rs. | 8-8 |
| 1 Do do do | ,, | 8 |
| 1 Do do small | ,, | 6 |
| 1 Large Antimaccassar | ,, | 5 |
| 1 Do do | ,, | 5 |
| 1 Small do | ,, | 4-8 |
| 1 Do do | ,, | 4-8 |
| 1 Do do | ,, | 4 |
| 1 Do do | ,, | 4 |
| 1 Do do | ,, | 3 9 |
| 1 Do do | ,, | 3-8 |
| 1 Do do | ,, | 2-9 |
| 1 Oval Antimaccassar pink | ,, | 2 |
| 1 Piano Stool Cover | ,, | 1 |
| 1 Braided Alpaca frock | ,, | 3-8 |
| 1 Travelling Bag | ,, | 2-11 |
| 1 Pair Braided Slippers | ,, | 4-8 |
| 1 Pair Slippers | ,, | 2 |
| 1 Crochet Collar | ,, | 2-4 |
| 1 Do do | ,, | 1-9 |
| 1 Knotted Bag | ,, | 1-12 |
| 1 Do do | ,, | 1-12 |
| 1 Do do | ,, | 1-12 |
| 1 Do do | ,, | 1-10 |
| 1 Pair Flowered Mats | ,, | 2-8 |
| 1 Pair Jugs | ,, | 1 |
| 1 Money Purse | As. | 9 |
| 1 Do do | ,, | 9 |
| 1 Doll's Straw Hat | ,, | 12 |
| 1 Do do do | ,, | 10 |

JACOOB SAIB, Chepauk Street, Triplicane, Exhibitor.

9086 5 Artificial Flowers in stand, Rs. 3-8 ea.

Miss TATHAM, Saint Thome, Exhibitor.

9087 Shawl from China.

W. E. UNDERWOOD ESQ., Exhibitor.

9088 2 Japan Boxes.

9089 Embroidered Cloth made by Jetting Row. Rs. 550.

Mrs. Nicholls, Exhibitor.

9090 Paper Flowers intermingled with West Indian grass, and leaves made of feathers, grouped in a basket made of Sea weed.

J. Rohde Esq., Exhibitor.

9091 Carved Ivory Cup.

Linga Razoo, Exhibitor.

| | | | |
|---|---|---|---|
| 9092 | Pieces of embroidered Muslin, | | Rs. 350. |
| 9093 | Do | do | Rs. 50. |
| 9094 | Do | do | Rs. 17-8. |
| 9095 | Do | do | Rs. 14. |
| 9096 | 2 Embroidered hand punhahs | | Rs. 175. |

Messrs. P. Orr, and Co., Exhibitors.

9097 Model of a Steam Engine by J. Prothero.

Sillar Sahib, Exhibitor.

9098 Box containing Attars.
9099 Box containing hair oils.
9100 Parcel of Smelling Woods.

Major A. T. Jenkins, Exhibitor.

9101 Sun dial made by Messrs. Lowe and Co.

Rev. P. Percival, Exhibitor.

9102 Stereoscope with likenesses of the Misses Percival.
9103 Copies of the Dinavurtiamani of 5th and 12th February 1857.

Ramer Cotiah Naidoo, Exhibitor.

9104 Silk handkerchiefs.

Captain Newlyn, D. A. C. G. Exhibitor.

9105 Amputating knife.

Annasawmy, Asst. Artificer Medical Stores, Exhibitor.

9106 Couching Needle for the eye.

C. V. Connaih Chettiar, Exhibitor.

9107 Specimens of paste Boards.
9108 do mill Board.
9109 Book containing Samples of Paper (*the above made at the Paralove Mills.*)

Ameenahannum, Exhibitor.

9110 Basket of cotton.

R. D. Parker, Esq. Collector of Madura Exhibitor.

OILS.

1133 Lamp.
1134 Margosa.
1135 Chittamanaka or Castor.
1136 Ilooppoo.
1137 ... ... .. ..
1138 Koorconthennai.
1139 Gingily.
1140 Poonka.
1141 Kauttamankoo.
1142 Kooroochoo.
1143 Sheep.
1144 Teak.
1145 Sevanarvemboo.
1146 Davadari.

GUMS.

1147 Karoovalen.
1148 Margosa.
1149 Mooroongai.
1150 Mango.
1151 Vailam.
1152 Do. Do.
1153 Vangai.
1154 Dammer.
1155 Velvailan.
1156 Keilley or milk hedge.
1157 Vilchry.

IRON ORES.

1158 Iron ores.
1159 Do. Sand Do.
1160 Do.

DYES.

1161 five Specimens of Dyes.
1162 Vaimbalam puttai.
1163 Manoyadoom vair.
1164 Vaimbalum codi.
1165 Munganati or naud vair.
1166 Laffer Seed.
1167 Tabacco.
1168 six Specimen of Segar
1169 six Chanks

---

Aroonachellum Chetty, Exhibitor.

CHANKS.

1170 one Moochank Rs. 35.
1171 ten Common chanks Rs. 1-4.
1172 ten Polished do Rs. 1-14.

---

R. D. Parker, Esq. Collector of Madura Exhibitor.

FIBRES.

1173 Poolishee
1174 Cocoanut.
1175 Eroochalai.
1176 Plantain.
1177 Oaddi.
1178 Sadamboo.
1179 Palmira.
1180 Marool.
1181 Thalai
1182 Autti.
1183 Karoonkathalay.
1184 Kauthalay.
1185 Sali.
1186 Kadambai.
1187 Valoockai.
1188 Saroogoo.
1189 Velvaila.
1190 Valamoori.
1191 Perandai.
1192 Vaila.
1193 Auri.
1194 Avile.
1195 Thoothe.

---

Voodappah Naick Exhibitor.

1196 Malayitta.
1197 Karoovaila.

---

Doddapah Naick Exhibitor.

1198 Kattaila.

---

R. D. Parker, Esq. Collector of Madura Exhibitor.

DRUGS.

1199 Moockarandi Sevenar Vaimboo.
1200 Noachi.
1201 Amoockola Kelangoo.
1202 Auda thoddai.
1203 Keelvanully.
1204 Purpadagum.
1205 Peramootti.
1206 Koodivaily.
1207 Peroonthoombai.
1208 Nunnari.
1209 Tulai Sooroole.
1210 Sittamootti.
1211 Ponnangani.
1212 Audoothinna Palai.
1213 Peenari Sunkoo.
1214 Malathanki.
1215 Cauttoo Curonai.
1216 Visha moongil.
1217 Villackondoo moottoo vair.
1218 Peicommatti.
1219 Seroograi.
1220 Seroomooddackattan.
1221 Koavay.
1222 Vaily paratty.
1223 Kundum Kattary.
1224 Veppalai.
1225 Poonkoo.
1226 Sunkoo.
1227 Kolenjee.
1228 Toodoovalai.
1229 Nelavangai.
1230 Boomichuckarai Kelungoo.
1231 Auvoori.
1232 Nelappanaikelangoo.
1233 Malai Auvoori.
1234 Imboorah.
1235 Indoo.
1236 Vellaroogoo.

---

Veedpodagum Exhibitor

1237 One Box of Drugs

### Revd. C. R. Little, Exhibitor.

1238 Cuscus root.

### R. D. Parker, Esq. Collector of Madura Exhibitor.

Woods.

1239 Veckauli four samples.
1240 Karoothali 4 do
1241 Teak 6 do
1242 Rose 3 do
1243 Vainkay 6 do
1244 Paulai 4 do
1245 Kadoockoi
1246 Gallnut 4 do
1247 Agil 4 do
1248 Madagherry Vamb 4 do
1249 Manjacadamboo 4 do
1250 Neercadamboo 5 do
1251 Alinjee 2 do
1252 Karoovailm 5 do
1253 Jack 3 do
1254 Vangai 5 do
1255 Peruh 3 do
1256 Iroovettala 6 do
1257 Neycatta 5 do
1258 Earacally 5 do
1259 Punneer 3 do
1260 Maroodum 5 do
1261 Kanya 4 do
1262 Pinjuttai 4 do
1263 Navoogary 4 do
1264 Nariveroosoo 5 do
1265 Nedoonari 5 do
1266 Karoockoovry 4 do
1267 Davadari 5 do
1268 Koongiliam 3 do
1269 Malayvaimboo 5 do
1270 Irooppoottoo 3 do

Stones.

1271 Petrified Stones.
1272 do of another kind.
1273 Singitta.
1274 Black pebble stone.
1275 Mooroogoo.

### Dasigum Iyengar, Exhibitor.

1276 Block of Maculstone.
1277 sixteen Vessels of Maculstone.

### Savoogun Chetty, Exhibitor.

Metal Vessels.

1278 Sundana copai 2 Rs. 1-9-6.
1279 Tumbler 0-12-6.
1280 Suracay Lotah As. 10 6.
1281 Poojavuttagay, Rs. 1-6.
1282 Seena chemboo 1-8-4.
1283 Small 0 9-0.
1284 Rajahmuhandrum chomboo 1-12-1.
1285 do Small 0-13-3.
1286 Lotah chemboo 1-7 7.
1287 Small do. 11-3.
1288 Abkurra do. 0-8-1.
1289 Punjapattarum 1-12-4.
1290 Koomba 2-4-0.
1291 Small do. 0-14-0.
1292 Padikum 1-2-6.
1293 Sinoockaricaky 0-6-0.
1294 Arnay 0-5-0.
1295 Myeburnay 0-3-0.
1296 Roodranee 2-0-9 0.
1297 Tootinaga Goosa 3-0-0.

### Letchoomana Chetty, Exhibitor.

1298 Bell Rs. 4 14-9.
1299 Goosa Rs. 4-1-3.
1300 Sundana coomba Rs. 2-4-3.
1301 Large Tumbler Rs. 1-4.
1302 Small do. As. 15.
1303 Cup Rs. 1 9.
1304 Plate Rs. 2-3.
1305 do Rs. 2 3-8.

### Aroonachellum Chetty, Exhibitor.

Cloths.

1306 Laced Woman Cloth Rs. 96.
1307 Dyed do do Rs. 86.
1308 Gown Cloth Rs. 2-8.
1309 Table Cloth Rs. 6-3.
1310 Dozen of Napkins Rs. 2-4.
1311 do do Rs. 2-4.
1312 Coarse Cloth 10 Yards Rs. 5-4.
1313 Black do 10 Yards Rs. 3-15.
1314 Black Cloth 10 Yards Rs. 3-15.
1315 Piece of Gown Cloth Rs. 4-8.
1316 do of do Rs. 3-4-6.
1317 do Rs. 3-4-6.
1318 do of Cloth Rs. 3-4-6.
1319 do of do Rs. 3.

### Letchooman, Chetty Exhibitor.

1320 Laced Cloth Rs. 165.
1321 Head Handkerchiefs Rs. 45.
1322 Laced Man Cloth Rs. 35.
1323 do do Rs. 37.

### Revd. C. R. Little, Exhibitor.

Fecula or Starchlike Substances.

1324 Arrow root 25 lbs.
1325 Tapioco flour 30 lbs.
1326 flour ¼ Viss
1327 Plantain meal ¼ Viss.

### Narasinga Row, Exhibitor.

1328 Aulvully root flour.

### Arnachellum Chetty, Exhibitor.

1329 two Valories
1330 Puravay Marams Rs. 3.

### Dasegum Iyengar,

1331 two Horn Valaries Rs. 5.
1332 one Ivory do Rs. 10.
1333 one Fencing Stick with horn handle Rs. 6.

### R. D. Parker, Esq. Collector of Madura Exhibitors.

1334 one Water wheel Rs. 5.

# MALABAR.

Tachara Kavil Tiroomelpood, Exhibitor.

2642 One Box Gold Dust, Rs. 61.

Ramoony Marar, Tahsildar of Ernaad, Exhibitor.

2643 Iron Ore.

Mr. W. Bates, Exhibitor.

2644 Lime Stones.
2645 do. Slocked.

Ramoony Panikar, Tahsildar of Cotteyam, Exhibitor.

2646 Slate Stone.

Mr. F. Green, Fical of Cochin, Exhibitor.

2647 Sand for Polishing Gold.

Ramoony Panikar, Tahsildar of Cotteyam, Exhibitor.

2648 Cardamom, Rs. 1.
2649 Cassia Bark.
2650 Cassia Buds, As. 2.
2651 Cinnamon prepared, As. 2-7.
2652 Cloves, As. 1.

Tahsildar Chandoo Nair, of Coormenaad Exhibitor.

2653 Cocoanut, As. 6.

Ramoony Panikar, Tahsildar of Cotteyam, Exhibitor.

2654 Mace, As. 6.
2655 Nutmegs, As. 4.
2656 Pepper, ungarbled black heavy, As. 2-3.
2657 do. white, As. 3.

Chendoo Nair, Tahsildar of Coormenaad, Exhibitor.

2658 Turmeric, Pice 4.

**Fecula or Starch-like Substances.**

Caray Bapoo, Tellicherry, Exhibitor.

2659 Arrow Root, 1st sort, As. 3-2.

Tahsildar of Walloowanaad in Comen Nair, Exhibitor.

2660 One Packet Yam Chavel.

Candoo Nair, Tahsildar of Coormenaad, Exhibitor.

2661 One Packet Coorookul.

Tahsildar of Walloowanaad in Comen Nair, Exhibitor.

2662 one Packet Kavalah.
2663 one do. Korana.
2664 one do. Noot.
2665 one do. Noolen Chavel.
2666 one do. Nopen.
2667 one do. Poola.
2668 one do. Shadavery.
2669 one do. Venny.

**Gum and Gum Resins.**

2670 one Packet Cashew Gum.
2671 one do. Chengilium.
2672 one do. Coonguilium.
2673 one do. Dammer.

These are obtained from a tree named "Paynee." The sap first obtained is called "Chengilium," the next "Coonguilium," and when dried it is called Dammer.

2674 one Packet Kino.
2675 one do. Lac.
2676 one do. Panichy Fruit.

The fruit is used for tanning leather and the sap for varnishing canes.

**Fibres.**

Anunthiyer Putter, Tahsildar of Cawaye Exhibitor.

2677 Annakolly.

Ramoony Marar, Tahsildar of Ernaad, Exhibitor.

2678 Chella Tree Bark, tanned, Pice 4.
2679 Chella do. do. untanned.

Anunthiyer Putter, Tahsildar of Cawaye Exhibitor.

2680 Chir.
2681 Chota Kolly.
2682 Cotton.
2683 Kawlah.
2684 Koorondotty.
2685 Vella Kolly.
2686 Venna Nar.

**Oil Series.**

Krishna Menon, Tahsildar of Chowghat, Exhibitor.

2687 Caju Nut, 1¼ Bottle, Pice, 10.

MADRAS, C. K. S. PRESS—D. P. L. C. CONNOR, PRINTER.

Ramoony Panikar, Tahsildar of Cotteyam, Exhibitor.

2688 Castor, 1 Bottle, Rs. 1.

Krishna Menon, Tahsildar of Chowghat, Exhibitor.

2689 Carrincotta, 1½ Bottle, As. 1-6.

Manjoo Comaty, Huzzoor Head Moonshee, Exhibitor.

2690 Lemon Grass, 1½ Bottle.

Krishna Menon, Tahsildar of Chowghat, Exhibitor.

2691 Necratty, ¾ Bottles, As. 3-2.

Chandoo Menon, Tahsildar of Coormenaad, Exhibitor.

2692 Odda Vally Seed, ¼ Bottle, As. 2-10.

Krishna Menon, Tahsildar of Chowghat, Exhibitor.

2693 Poona, 1½ Bottle, As. 4-7.

## Dyes.

Collector of Malabar, Exhibitor.

2694 Chay Root, 1 Parcel, As. 6.
2695 Sappan Wood, 1 piece, Rs. 1-8.

## Timber.

2696 two pieces Beety or Black Wood or Rose Wood.
2697 two do. Teak.
2698 two do. Jack.
2699 two do. Aynee.

The average price of No. 2697 per Candy is 15 Rs.—No. 2696 fetches 10 Rs.—No. 2698, 4 Rs. and No. 2699, 5 Rs. per Candy.

2700 two do. Cheeroo Poona.

No. 3700. This wood is unfit for building purposes—but makes good Masts for Vessels. It fetches a price of 100 Rs. each.

2701 two do. Venteak.
2702 two do. Erool.
2703 two do. Caramaradoo.
2704 two do. Tallymaradoo.
2705 two do. Venga.

Nos. 2701 to 2705. Used for buildings of minor importance. Their prices vary frem 2 to 4 Rs. per Candy.

2706 two Pieces Cana Kaidah.
2707 two do. Canharah.
2708 two do. Caroovaga.
2709 two do. Adchkaden.
2710 two do. Padree.
2711 two do. Nhettavalah.
2712 two do. Veembah.
2713 two do. Kayamee.
2714 two do. Mavo (Mango Tree.)
2715 two do. Annakarah.

Nos. 2706 to 2715. Unfit for buildings but used as firewood and for other common purposes. The fruit of No. 2714 is eatable.

2716 two Pieces Poolly Marom or Tamarind Tree.

No. 2716. The fruit is used by Natives as an ingredient in their curries, the average price of which is 6 Annas per Maund.

2717 two Pieces Irripa.
2718 two do. Poowom.

Nos. 2717 and 2718. Unfit for buildings, but lamp oil is extracted from the fruits of these trees. The price of the oil does not exceed 4 Annas per Dungally, (2 seers).

2719 two Pieces Neeratty.
2720 two do. Changanah.
2721 two do. Choroovenga.
2722 two do. Cooloor Mavo.
2723 two do. Taddatee.
2724 two do. Carrintagarah.
2725 two do. Coat Vapoo.
2726 two do. Poonah.
2727 two do. Potan Vagu.
2728 two do. Nemeny Vagu.
2729 two do. Coomeyoo.

Nos. 2720 to 2729. Unfit for buildings. The bark of No. 2722, when steeped in water, produces a vicious substance, which is mixed with chunam for building purposes.

2730 two Pieces Cadookah.
2731 two do. Tany.
2732 two do. Nely.

Nos. 2730 to 2732. Unfit for buildings, but the fruits are used for medical purposes and fetch small prices.

2733 two Pieces Caroomarom or Ebony.
2734 two do. Paynavoo.
2735 two do. Man Doruguy.
2736 two do. Veyah.

Nos. 2733 to 2736. Generally unadapted for any building, but No. 2734 which is seldom procurable, is used in common work.

2737 two Pieces Agela or Cedar Wood.

No. 2737. This wood is usefol for furniture, but is found only in high forests.

2738 two Pieces Trikadamboo.
2739 two do. Arampoollie.
2740 two do. Cheeny.

Nos. 2738 to 2740. Fit for common purposes only.

2741 two Pieces Payanah.

No. 2741. Fit for common purposes only, but the fruit is useful and fetches a small price.

2742 two Pieces Odoogah.
2743 two do. Palah.
2744 two do. Tavallah Marom.
2745 two do. Poddy Anny alias Oopooty.
2746 two do. Kallantallah.
2747 two do. Poollah.
2748 two do. Nhaval.
2749 two do. Moorokoo.
2750 two do. Peral.
2751 two do. Mayl Elloo.
2752 two do. Atee
2753 two do. Araal.
2754 two do. Plasha.
2755 two do. Nee Benteak.

Nos. 2742 to 2755. Fit for common purposes only.

2756 two Pieces Irimbagom.

No. 2756. This is a very strong wood. From its hardness it requires much labor to work it up. It is heavy and sinks in water. It is very useful for building purposes and its price like that of Jungle wood, is only 3 or 4 Rs. per Candy.

Ramoony Panikar, Tahsildar of Cotteyam, Exhibitor.

2757 Eight lbs. Sandal Wood, Rs. 1-3-2.

**Pulses, etc. Cultivated in Malabar as Food for Man or Beast.**

Cara Bapoo, Exhibitor.

2758 Four lbs. Coffee, As. 12-8.

Anunthiyer Putter, Tahsildar of Cawaye Exhibitor.

2759 McLeod Seer. Paddy Chitaponaryen.
2760 Four Cadda.
2761 Five Kaypenny.
2762 One and three-quarter Keery Pala.
2763 Four Paddy Neerkayma.
2764 Five Parakoden.
2765 One and a quarter Raja Mumy.
2766 Two Rajah Dany.
2767 Two Pieces Creeper Mara Manhil.

Fresh water fit for drinking is obtained by an incision when fresh, when dry it is also used for medicine.

**Substances used in Manufacture.**

Ramoony Marar, Tahsildar of Ernaad, Exhibitor.

2768 Six Pairs Horns, Bison, Rs. 6.

Anunthiyer Putter, Tahsildar of Cawaye, Exhibitor.

2769 One Pair Horns Stag, Rs. 1.

Collector of Malabar, Exhibitor.

2770 One Skin Royal Tiger, tanned, Rs. 4.

Tachrakavil Tiroomelpad, Exhibitor.

2771 Fifty lbs. Tusk, Elephant, Rs. 150.

Manjoo Comaty, Huzzoor Head Moonshee Exhibitor.

2772 One Fish.

Ramoony Marar, Tahsildar of Ernaad, Exhibitor.

2773 Two Pairs Hogs.

**Arts and Manufactures.**

*Gold and Silver Ornaments.*

Anantha Shetty Guery, Gold Smith, Exhibitor.

2774 Gold Bracelet set with seven Ferozas, seven touch, Rs. 43.
2775 do. with five Rubies, Rs. 29-8.
2776 Broach with four Pearls and one Ruby, seven touch, Rs. 23.
2777 do. Elephant, seven touch, Rs. 10.
2778 do. Pin, do. Rs. 5.
2779 Silver Bracelet, one pair, Rs. 12.
2780 do. do. do. Rs. 10.
2781 one do. Broach, Rs. 2-8.
2782 one do. do. Rs. 8.
2783 one do. do. Rs. 7.
2784 one do. do. Rs. 6.
2785 one do. do. Rs. 5.
2786 one do. do. Rs. 4-8.
2787 one do. do. Rs. 3-8.
2788 one Silver Cross, Rs. 3-8.
2789 one do. Elephant, Rs. 3-8.
2790 one do. Flower, Rs. 2-8.
2791 one do. Hair Pin, Rs. 7.
2792 one do. do. Rs. 4.
2793 one do. Needle, Rs. 1.
2794 four do. do. Rs. 2.
2795 one do. Pin set with Stones, Rs. 3.
2796 one do. Pin, Rs. 2.
2797 one do. Ram Sawmy, Rs. 4.

Callingul Choy Cootty, Moopen Huzzoor Treasurer, Exhibitor.

2798 Peshan Cutty Knife, with Gold handle, Case, Chain, Ear and Tooth Picker—Silver gilt Tongs, Thorn, Picker and Steel (Knife sharpener,) Rs. 114-4-10.
2799 Silver Rose Water Sprinkler, Rs. 21-4.
2800 Case containing the above, Rs. 3-8-4.

**Brass Utensils.**

Chalapoorata Eresha Menon, Tahsildar of Nedinganaad, Exhibitor.

2801 Two Chunam Cup and Spoon, As. 12.
2802 Guindy or Water Jug, As. 12.
2803 Two Oil Cups, As. 8.
2804 One pair of Tumblers with Covers, Rs. 3.

Ramoony Marar, Tahsildar of Ernaad, Exhibitor.

2805 Guindy or Water Jug, Rs. 1-0-6.
2806 Oil Cup, As. 6-6.
2807 Oorly Bason, Rs. 1-5.
2808 Sandalwood Powder Cup, As. 7.

**Miscellaneous.**

Ramoony Marar, Tahsildar of Ernaad, Exhibitor.

2809 Four Bow and Arrows, As. 8.

Caray Bapoo, Exhibitor.

2810 Candles, As. 12.

Pavanom Paly, Exhibitor.

2811 Candles, As. 8.

Mr. Sneliksz, Exhibitor.

2812 Coir matting or Rugs, As. 10-8.
2813 Three Pieces do. do. Rs. 1-4.

Mr. J. D'Rozario, Tahsildar of Cherical, Exhibitor.

2814 Rattan Basket, large, Rs. 1.
2815 do. do. small, As. 12.
2816 Sandalwood Box inlaid with Ivory, Rs. 10.
2817 do. Card Box, Rs. 2-4.
2818 do. Paper Folder, As. 12.

Ramoony Marar, Tahsildar of Ernaad, Exhibitor.

2819 Spear, Rs. 5.

Mamy, Exhibitor.

2820 Straw Mat, As. 10.

Paranam Paly, Exhibitor.

2821 Wax Tapers, Rs. 1-5-4.

Mr. J. J. D'Rozario, Tahsildar of Cherical, German Mission, Exhibitor.

2822 Checked Cloth, Rs. 1.
2823 do. do. As. 14-9.
2824 Elach Cloth, black, Rs. 1.
2825 do. green, As. 14-5.
2826 Handkerchieves, Rs. 1-3-2.
2827 Peshty Cloth, As. 8, worn by Brahmins.
2828 Trowser Cloth, Rs. 1-1.
2829 do. Rs. 1-6-6.
2830 do. Rs. 1.
2831 White Drill, Rs. 1-0-9

Mr. Bassano, Tahsildar, Wynaad, Exhibitor.

2832 Dry Cardamum.
2833 Green do.
2834 Coffee Pea Berry.
2835 do. Flat Berry.
2836 Honey.
2837 Honey Comb.
2838 Wax.
2839 Lac.
2840 Dammer.
2841 Seed of Neeralotam Tree.
2842 Seed of Poovathan Tree.
2843 Seed of the Castor Oil Tree.
2844 Fibres, Leaf and Bark of the Kolly Tree.
2845 Branch, Leaf and Fruit of the Parrchee Tree.
2846 Bark of the Marapoora Tree with its Leaf and Branch.
2847 Fibres and Branch of Tronic.
2848 do. of Chatachee Tree.
2849 do. of Wypura Tree.
2850 do. of the Warnakaad Tree.
2851 Bows.
2852 Arrows.
2853 Red Clay.
2854 White Clay.
2855 Deers' Horns.
2856 Sionics Hair.
2857 Juice of the Venga Tree.
2858 One Piece of Venga Wood.
2859 Branch and Leaves of the Panchanta Tree.
2860 Kanan Chendli.
2861 Teranoondon Paddy.
2862 Maila Koodujan do.
2863 Vellakan Paddy.
2864 Narragan Vallakan do.
2865 Chenal do.
2866 Koonhy Kayocyan do.
2867 Fibres of the Vena Tree.
2868 do. Choera do.
2169 do. Chorakal do.
2870 do. Vellakolly do.
2871 do. Annokolly do.
2872 do. Kavool do.
2873 do. Koornandote do
2874 Elks Horn.
2875 Spotted Deers' Horn.
2876 Oil of the Boalans Treder.
2877 Hog's fat.
2878 Juice of Moramanhil.
2879 Cotton Silk.
2880 Cotton.
2881 Cotton Fruit.
2882 Bison's Horns.
2883 Pynee Leaves and Fruits.
2884 Bison Horns.
2885 Poonah Fruit.
2886 Piner Gum.
2887 Shadavery Root.
2888 Pudd Wiyangoo.
2889 Kachoorom do.
2890 Deer's Horn.
2891 Pills
2892 do.
2893 Powder Bry.
2894 do.
2895 do.
2896 do.
2897 do.
2898 do.
2999 do.
2900 do.
2901 do.
2902 do.
2903 do.
2904 do.
2905 Blookearth.
2906 Juice of Kachum.
2907 Pooly alias Pinompooly.
2908 Juice of Karaga.
2909 White Stone.
2910 Aloe Fibres.
2911 Chama a kind of Gram.
2912 Chenjaliom.
2913 Kaloowanhy.
2914 Paddy growing on the Hills.
2915 Parakaden Paddy.
2916 Coir Mats.
2917 Rattans.
2918 Cooroonthoty.
2919 Sarsaparilla.
2920 Catechu.
2921 Fish Liver Oil.
2922 Theroovathapussoh.
2923 Velayapoo.
2924 Moplah Hats.
2925 Silloor Snuff Box.
2926 Sandalwood Box.
2927 Moplah Cap.
2928 Sandalwood Card Case.
2829 Cocoanuts from the Diver Islands.

# REPORT OF LOCAL COMMITTEE OF MALABAR.

## DIVISION A—MINERAL KINGDOM.

2642. *Gold Dust*—is found in many of the Rivers of Malabar which take their rise in the Western Ghaut and slopes of the Neilgherries. The finest Gold Dust is washed from the sand of the Carcatode stream, rising in the Moorkoorty Peak range. It yields 95 per cent. of pure gold. In the sand of other streams of Wynaad and Nellamboor gold is found.

The common "washing" method is that pursued by the Natives, the gold being at length collected with quick-silver.

An attempt made by Government to wash Gold on public account failed, and a Committee reported unfavorably on the subject in 1833, but the rocks through which these Hill streams pass well deserve examination.

2643. *Iron Ore.*—The District is rich in iron ore, on which Mr. Beaumont of the Beypoor Iron Foundry, has furnished some valuable remarks, in 1854. A copy of this Paper appears to have been transmitted to you on the 24th June of that year.

The Talooks where this valuable article is most procurable are Walloowanaad, Ernaad, Coormenaad and Temelpour. Large quantities are collected by the Iron and Steel Company from whose Foundry, near Beypoor, the exportations of Pig Iron, &c. were

| | | | |
|---|---|---|---|
| In 1854-55 | 1183 Cwt. | Value Rs. | 6,360 |
| 1855-56 | 3584 „ | „ | 18,790 |
| 1856 May | 5240 „ | „ | 28,170 |

## DIVISION B—SPICES, &c.

2648. *Cardamom.*—This valuable spice of spontaneous growth of the Hills of the District, is chiefly of Wynaad, but might no doubt become a valuable Garden produce as in Canara. The revenue derivable by Government is farmed out. During the last five Fuslies (1261 *to* 1265) it amounted to Rs. 18,775 per annum, the renter paying the Proprietors of the Hills a moiety of the value of the article, amounting to Rupees 300 per Candy. The exports of this article during the above five years is as follows—

| | | | | |
|---|---|---|---|---|
| 1261 | Quantity | 2,207 | Value | 1,90,645 Rs. |
| 62 | „ | 1,449 | „ | 1,13,462 „ |
| 63 | „ | 2,225 | „ | 1,87,795 „ |
| 64 | „ | 1,630 | „ | 1,43,490 „ |
| 65 | „ | 1,258 | „ | 1,12,867 „ |

2651. *Cinnamon*—is chiefly the produce of Anjarakundy, a Plantation held by Mr. Brown in North Malabar, the external trade of this article seems to have fallen off; for, the average export does not exceed 200 Cwt.

2653. *Cocoanuts*—is the staple product of Malabar—the tree is cultivated in every garden in the Coast Talooks. The tax on plantation yields to the Government a revenue of upwards of 3,13,800 Rupees. The quantity of Cocoanuts exported for 5 years is shewn below,

| | | | | |
|---|---|---|---|---|
| In 1261 | No. 393,46,795 | Value Rs. | 5,13,292 |
| 62 | „ 382,14,650 | „ | 5,12,733 |
| 63 | „ 257,44,800 | „ | 3,36,677 |
| 64 | „ 308,79,560 | „ | 4,05,581 |
| 65 | „ 251,41,372 | „ | 3,29,072 |

Besides which the exports of "Coprah," dried kernel without shell, during the last Fusly amounted to the value of Rupees 4,46,600, and of Cocoanut Oil from Ports of Malabar to Rupees 4,19,120.

2656. *Pepper.*—This is a staple of the District, especially parts of the Talooks of the Northern Division of Malabar. The culture is increasing, encouraged no doubt by the exemption from land

tax enjoyed. Of late years the demand for the article has likewise increased. The market price is now as high as about 100 Rupees per Candy. The Quantity exported in

| | | | | | |
|---|---|---|---|---|---|
| 1261 | was... 1,09,583 | Cwt. | @ | 8—15 ...per Cwt. | 9,55,307 Rs. |
| 62 | „ ...1,37,037 | „ | | „ .. | 11,12,505 „ |
| 63 | „ ...1,02,710 | „ | | „ ... | 8,30,909 „ |
| 64 | „ ... 99,365 | „ | | „ ... | 8,90,708 „ |
| 65 | „ ...1,35,875 | „ | | „ ... | 11,88,900 „ |

2658. *Turmerick*—is grown of excellent quality, more or less in all parts of the District, but the traffic is not in extent what it might be—average quantity exported being 2,640 Cwt.

2659. *Arrowroot.*—The plant producing this root is not cultivated, but grows abundantly, in swampy grounds, in the interior parts of the District. The poorer class collect the root and bring it, as also the powder prepared in a rough way, to the coast markets, where the best flour is manufactured. Exports

| | | | | |
|---|---|---|---|---|
| In 1261 | 11,861 | Cwt... Value | 47,667 | Rupees. |
| 62 | 9,590 | „ „ | 42,373 | „ |
| 63 | 9,760 | „ „ | 62,522 | „ |
| 64 | 4,883 | „ „ | 32,214 | „ |
| 65 | 8,056 | „ „ | 28,311 | „ |

The above includes the portion exported in its rough state, hence the discrepancy between the quantity and value.

2660 to 2669. A great variety of Yams is cultivated in all parts of the District. They are not however articles of commerce deserving of note.

2670 to 2676. *Gums of Sorts.*—The gums of this District are not articles of Commerce, as they might be, but enquiries, such as is excited by our Exhibition,—Local and Central—will awake the attention which would be richly rewarded.

2677 to 2686 *Fibres.*—The foregoing remarks apply to these items. The Cotton exported from our Ports is the produce of Coimbatore, &c. and passing through Malabar to the Sea Port—the average value of such exportations may be stated at Rs. 2,73,670. Successful experiments were made at Palghaut some years ago. There can be little doubt that many parts of the country would grow a fine Cotton.

2687 to 2693. *The Oils*—enumerated under these numbers are of rare produce. Small quantities of Castor and Poona Oils are brought from the adjoining Districts for local consumption and exportation.

2695. *Sappan Wood.*—is of common growth in the Eastern parts of the Centre Division of Malabar, and might be greatly extended. It is an article of Commerce, the Exports being.

| | | | | | |
|---|---|---|---|---|---|
| In 1261 | 3,974 | Cwt... | Value... | Rs... | 12,145 |
| 62 | 3,717 | „ | „ | „ | 10,979 |
| 63 | 5,240 | „ | „ | „ | 15,144 |
| 64 | 2,676 | „ | „ | „ | 7,541 |
| 65 | 3,764 | „ | „ | „ | 10,935 |

2696. *Beetty or Rose Wood*—The Forests in the S. E. Talooks of Malabar abound with this valuable wood—it is chiefly used for Cabinet work, for which purpose it is largely exported—the value of such exports being

| | | |
|---|---|---|
| In 1261 | Rs. | 44,810 |
| 62 | „ | 48,616 |
| 63 | „ | 51,454 |
| 64 | „ | 33,670 |
| 65 | „ | 48,000 |

2697. *Teak Wood.*—This valuable and useful wood is another staple article of external trade and large local consumption. The Bombay Government draw largely upon this District for Teak

required for use in the Dockyard, &c. The general demand is so brisk that prices have of late years risen to Rs. 1-8-7 per cubic foot. The value of the Exports may be quoted as follows:

| | | |
|---|---|---|
| In 1261 | Rs. | 1,63,066 |
| 62 | „ | 2,96,364 |
| 63 | „ | 1,70,019 |
| 64 | „ | 1,45,960 |
| 65 | „ | 1,72,976 |

Most successful operations in Teak planting were carried out by the late Mr. Conolly in the Ernaad Talook and ought to be generally extended.

2707 to 2756. The various descriptions of wood enumerated under these Nos. (Ebony, No. 92, excepted) are classed in the Tariff as "Jungle wood," some of them, such as Jack, Aynee, Benteak, Eervol, Caramaradoo, Cedar wood, are much in requisition for house building, Cabinet work, &c. Large quantities are annually exported, as shewn below.

| | | |
|---|---|---|
| 1261 to the Value of | Rs. | 89,050 |
| 62 | „ | 93,760 |
| 63 | „ | 1,42,560 |
| 64 | „ | 1,42,280 |
| 65 | „ | 1,52,950 |

*Ebony*,—No. 2733 is less abundant. On an average of 5 years the value of the exportss short of 5000 Rupees.

2757. *Sandal Wood*—is the produce of Mysore and Coorg, which merely passes through this District for exportation, the quantity shipped off

| | | | | | |
|---|---|---|---|---|---|
| In 1261 | was | 4,865 | Cwt. | Value Rs. | 60,183 |
| 62 | „ | 10,095 | „ | „ „ | 1,27,684 |
| 63 | „ | 8,370 | „ | „ „ | 1,16,862 |
| 64 | „ | 5,774 | „ | „ „ | 69,647 |
| 65 | „ | 10,170 | „ | „ „ | 1,21,491 |

2758. *Coffee*.—The cultivation of this valuable article is rapidly increasing, especially above the Ghauts in Wynaad, &c. In 1845-46 the quantity exported was 2,375 Cwt. The average of the subsequent five years was 8,472 Cwt. and that of the following five years rose to 21,064 Cwt.

The exportations during the last five years amounted as follows:—

| | | | | | |
|---|---|---|---|---|---|
| In 1261 | to | 13,723 | Cwt. Value | 1,51,707 | Rupees. |
| 62 | „ | 18,873 | „ „ | 1,88,784 | „ |
| 63 | „ | 33,110 | „ „ | 3,36,997 | „ |
| 64 | „ | 24,143 | „ „ | 2,70,457 | „ |
| 65 | „ | 49,754 | „ „ | 5,57,118 | „ |

We regret that the early date fixed for closing the period within which articles could be received at Madras has prevented us transmitting good samples of this year's crop.

It may be proper to remark here that the value entered above is the *Tariff* value, which is much below the market price. At present there is a brisk demand for Coffee, and prices have risen to 22 Rupees the Cwt.

2759 to 2766. *Paddy*.—Various descriptions of Paddy are raised in Malabar, but the greatest portion is the common rice which is not only consumed within the District, but largely exported—the exportations—which do not however include the quantity carried away by land and backwater to the other Districts,—may be reckoned as shewn below.

| | | | | | |
|---|---|---|---|---|---|
| In 1261 | 24,969 | In Ind.... Value | 33,773 | Rupees. | |
| 62 | 17,869 | „ „ | 24,191 | „ | |
| 63 | 34,298 | „ „ | 58,318 | „ | |
| 64 | 88,253 | „ „ | 1,79,664 | „ | A great portion of these are in ports from Canara and re-exported from our Ports. |
| 65 | 1,07,098 | „ „ | 2,02,309 | „ | |

4. Malabar has hitherto had no great traffic of articles coming under the head of "Animal Kingdom," though our forests are exceedingly rich in wild beasts. The only article

which appears to have been exported is Ivory, the average value for the last 5 years not exceeding Rs. 5,500 at Tariff value of Rupees 120 per Cwt.

5. The Elephants taken in the Malabar jungles are of a particularly large and hardy breed.

6. The same observation applies to "Arts and Manufacture" of every description, samples of these articles are however submitted.

## Mr. P. Proboo, Exhibitor.

### Medicinal Substances.

6967 Hollay Honay Oil Used for rhematic pain externally Rs 2 a bottle.
6968 Nannel Marana Oil Used externally to the head, for cooling the eyes Rs. 1-4 a bottle.
6969 Cannjee do. do. Used externally for venerial sores Rs. 2-4.
6970 Countell Kay do. Used externally for Itch Rs. 2-8.
6971 Kaulthonay kay do. Used externally for rheumatic pains As. 10
6972 Balleena do. do. Used externally for chronic sores Rs. 1-4.
6973 Heblia havina do. Used externally for lepra and for wounds Rs. 4-8.
6974 Egg do. Used externally for children in convulsions As. 8.
6975 Thakottay kay juice Used externally for rheumatic pains Rs. 1 8.
6976 Jenglee Hebalssoo do. Used for do. Rs. 1-6.
6977 Deers Card Used externally for scolds and burns Rs. 2.
6978 Hogs do. Used internally for Cattle Rs. 1-8.
6979 Neervatty Marada oil Used internally for lepra Rs. 3.
980 Careemkody bolly juice Used internally for cattle when they have cough As. 12.
6981 Gurgass Marada do. Used externally for mortified sores of cattle As. 14.
6982 Neerveess root Used internally and externally for venemous serpent Cites As. 12.
6983 Sarsaparilla do. As. 2.
6984 Do. powder Rs. 4.
6985 Maramanjela twig As. 8.
6986 Ambroothcolly powder Rs. 1-4.
6987 Cambilly pessina juice Used externally for head ache Rs. 1-4.
6988 Carnadth Marada cark and leaves Used in water for killing fish As. 12.
6989 Chokeel avre plant Used for softening the leather skins by mixing this in water As. 10.
6990 Addootheenathoo pallay bark As. 3
6991 Caroovalam kathay bark Used for strengthening the teeth As. 11.
6992 Chithroo Moolloo plant Used internally in Canjee for bites of mad dogs As. 8.
6993 Moorgana oil Used externally for scolds and burns Rs. 1.
6994 Wax do. Used externally for rheumatic pains Rs. 12.
6995 Fish liver do. Rs. 1.
6996 Contents of the stomach of Moolloo Hundy Used internally for worms and colic pains Rs. 4.
6997 Juice of Injee twig Used internally for Asthma Rs. 1.
6998 Rice chocked on the contents or goll of Fervole fish Used internally for worms and colic pains Rs. 2.
6999 Juice of Punumboo twig Used internally for cattle sore throat Rs. 1.
7000 Cand Manoosha Given internally for the small pox to abate its severity Rs. 1.
7001 Thakotteh seed oil Used externally rheumatic pains Rs. 2.
7002 Beellee root and leaves Used internally and externally mixed with bellum puttcharrach at the commencement of liver complaint Rs. 1.
7003 Eettighe root and leaves Used internally for diarhœa As. 4.
7004 White Neervies root and leaves Used internally for Cholera and convulsion Rs. 1.
7005 Pachottyor Sootticandy, Used externally for scrophulous swelling and internally for liver complaint As. 4.
7006 Eknaika root Used internally for diabetes Rs. 1-8.
7007 Tera Japponica tree This is to be mixed up with the above medicine for the above disease As. 8.
7008 Red root Used for liver complaint As 3.

### Oil and Seeds of different sorts.

7009 Cocoanut oil As. 8.
7010 Gingelly do As. 8.
7011 Caster do As. 8.
7012 Vegetable Tallow Rs. 1-4.
7013 Ardall M. oil or Gambolle oil Rs 20.
7014 Wood do. As. 12.
7015 Nagasarnpighe oil Rs. 1.
7016 Soorteh do. As. 8.
7017 Nagasampighe fruit As. 9.
7018 Caster seeds As. 2.
7018½ Gingelly do. As. 1-6.
7019 Wild Castor oil As. 4.
7020 Sandalwood do. Rs. 3.

### Juice and waters drawn from differnte kinds of Trees.

7021 Ardall trees juice or Gamboge Rs. 10
7022 Mathoo trees juice As. 8.
7023 Poolloolly do. do. As. 12.
7024 Bongha do. do. Rs. 1.
7025 Mud oil As. 8.
7026 Bears Beard Rs. 1.

### Gum and Fibres.

7027 Vegetablegum1stsort used for damer Rs. 1.
7028 Do. 2nd sort do do As. 11.

7029 Do. 3rd sort do do As. 10.
7030 Do. 4th sort do do As. 8.
7031 Doopadah juice or Chendrassa Used for varnish As. 8.
7032 Doopada tree milk Used with Bees wax for candles Rs. 5.
7033 Sealing wax As. 8.
7034 Mathy trees juice As. 2.
7035 Googulla Used as incense by Hindoos Rs. 3-8.
7036 Pineapple Fibre Rs. 2-8.
7037 Wild do, Rs. 2.
7038 Plantain do. As. 12.
7039 Coorondotty do. Rs. 1-4.
7040 Oar plant do. Rs. 1 8.
7041 Anneh kethada munjee Rs. 2-8.
7042 Poolly Manjee do Rs. 4-8.
7043 Cheleh trees do Rs. 2.
7044 Bendeh do As. 15.
7045 Wild Bendeh do As. 10.
7046 Do. Plantain do As. 2.
7047 Mullaly do. As. 12.
7048 Keony plant do. As. 12.
7049 Punnumboo do. As. 12.
7050 Bhotha annanas do. Rs. 1.
7051 Chedeh do. Rs. 1-8.
7052 Annethwa do. Rs. 2 8.
7053 Bark of Gujeh do Rs. 1-12.
7054 Annehvarjee Fibre Rs. 2.
7055 Coir rope As 8.
7056 Lose coir or cocoanut fibre P. 1.

### Refreshing Drinks and Liquor.

7057 Ratan juice As. 8.
7058 Fig trees do. As. 8.
7059 North twig do. As. 8.
7060 Oolleenjeel do. As. 8.
7061 Cajoo fruits arrack Used externally for Rheumatic pains As. 4.
7062 Vinegar from Byne tree As. 3.
7063 Vellumpatteh arrack As. 4.

### Flour and Grains.

7064 Topeco prepared from flour prepared in cold water As. 6.
7065 Do. flour As. 3.
7066 Do. Yam P. 6.
7067 Arrow root As. 3
7068 Bynee flour As. 3.
7069 Palmira do. As. 4.
7070 Muskathy rice&pady 1stsort Rs. 2-10
7071 Do. do. 2nd sort Rs. 3-4.
7072 Jeera rice and pady 1st sort Rs 3-8.
7073 Do. do. 2nd sort Rs. 2 2.
7074 Cullemh rice and pady 1st sort Rs. 2-2.
7075 Do. do. 2nd sort As. 2.
7076 Red Culmeh rice and pady 1st sort Rs. 2-2.
7077 Yelepal Jeerah rice Rs. 2 10.
7078 Kinibith rice and pady Rs. 2-4.
7079 Soongull do do Rs. 2-4.
7080 Hurry pady and pady rice Rs 2,
7081 Embadeh do. do. Rs. 2-1.
7082 Shemeh do do 1st sort As 2.
7083 Do. do do 2nd sort As 1-6.
7084 Culmeh rice 3rd sort Rs. 2-1-6.
7085 Soomsaleh pady Rs. 2 3.
7086 Jollah As 1.
7087 Raghy P. 9.
7088 Nannoomeh As 2.
7089 Moolloo Nannoomeh As 1-6.
7090 Do. 2nd sort As 1.
7091 Black Jollah As 1.
7092 Carrythenen rice As 1.6.
7093 Vollethenen do black As 1-2.
7094 Jevina do As. 2.
7095 Vollethenen do white As. 3.
7096 White Nannoomeh As 1-6.
7097 Kaud arva sapos As. 1.
7098 Coffee Rs. 6 per maund.
7099 Pepper As. 5.

### Sundries.

7100 Poovathum trees leaves in Paper.
7101 Maramanjela.
7102 Vetty.
7103 Woodoocooroo twig do.
7104 Wild Hebalsoo tree.
7105 Hollay Honay trees leaves.
7106 Huldy Hoovina plant.
7107 Pooleany twigs leaves
7108 Beelly Hoovina plant.
7109 Fig trees leaves.
7110 Oolleenhada twig leaves.
7111 Kand Sasmeh plant.
7112 Enho twig leaves.
7113 Panamboo do do.
7114 Sunnah Pulleh leaves
7115 Namada plant do
7116 Pollacayee twig ditto
7117 Nunjoodum leaves
7118 Wathumcolly plant
7119 Warrycoomutty twig
7120 Cupectwa leave
7121 Mullemcaca plant leaves
7122 Pooruncheoroo ditto
7123 Ooja Nayeepallea ditto
7124 Kand Avreh ditto
7125 Eurrumcody ditto
7126 Oorgah plant ditto
7127 Edumberyvalum ditto
7128 Cumbly pessina tree do
7129 Ratan ditto
7130 Keelmakee yam As. 2
7131 Chalogue ditto As. 2-6
7132 Ditto ditto white As. 1
7133 Country fashionable cups Rs. 1-8
7134 Sooghy pady Rs. 2 to be used as a congee with the medicine mentioned in No. 7006.
7135 Wethileavolly yam As. 1
7136 Wonna Quillong ditto As. 1-6
7137 Perra Quillong ditto Ps. 6
7138 Nareh ditto ditto As. 1
7139 Gold sand Ps. 9
7140 Iron dust As. 1
7141 Bettel nuts As. 12
7142 Cinnamon hask As. 8
7142½ Ghepalah seeds As 4
7143 Fish liver oil As. 12

German Mission at Mangalore, Exhibitor.

Mr. Haller, Manufacturer.

CLOTHS.

7144 Damask Table Cloth 7¼ square Rs. 5
7145 Diamond Table Cover 7½ do Rs. 5-12
7146 Do do. Cloth 5¼ by 9 feet As. 8.
7147 Bathing Towel 3 yards square As. 7-4
7148 Diamond Napkin 1½ yards square As. 3-8
7149 Red Handkerchief 1½ yards square As. 9
7150 Sherce red with silk border Rs. 6-8
7151 Do Blue Rs. 6-8
7152 Do red with heavy silk Rs. 16
7153 Dothra Rs. 1-4-6
7154 Do do Rs. 3
7155 Turband Rs. 5
7156 Grinding Stone Rs. 2-8.

# MASULIPATAM.

## Local Committee Exhibitors.

### Grains.

| | | |
|---|---|---|
| 3924 | One bag | Davandrubogaloo Rice |
| 3925 | Do. | Boodamaloo |
| 3926 | Do. | Coosamaloo |
| 3927 | Do. | Raujavaloo |
| 3928 | Do. | White Paddy |
| 3929 | Do. | Arla Paddy |
| 3930 | Do. | Bungaroo tegaloo |
| 3931 | Do. | Cunetasarloo |
| 3932 | Do. | Ramasagaraloo |
| 3933 | Do. | Pothoogunty |
| 3934 | Do. | Srastakapoo |
| 3935 | Do. | Aukoosavaloo |
| 3936 | Do. | Guntaloo |
| 3937 | Do. | Varagaloo |
| 3938 | Do. | Horse gram |
| 3939 | Do. | Spiked Millet or Sujjaloo. |

---

## Copoolah Seetiah Naidoo, Exhibitor.

3940 One bag Bamboo seeds.

---

## Local Committee Exhibitors.

### Pulses.

| | | |
|---|---|---|
| 3941 | One bag | Green gram |
| 3942 | Do. | Black Gram |
| 3943 | Do. | Dolichos catiang or alsundaloo |
| 3944 | Do. | Do. black or Cauramooloo |
| 3945 | Do. | Common Peas |
| 3946 | Do. | White Gingelly seeds |
| 3947 | Do. | Raggy |
| 3948 | Do. | Wheat |
| 3949 | Do. | Bengal Gram |
| 3950 | Do. | Coriander seeds |
| 3951 | Do. | Black Gingelly seeds |
| 3952 | Do. | Castor seeds or Aumoodaloo. |
| 3953 | Do. | Do. small or Chitlamoodaloo |
| 3954 | Do. | White javaloo |
| 3955 | Do. | Moka jonaloo |
| 3956 | Do. | Red Mokajonaloo |
| 3957 | Do. | Pegion Pea red |
| 3958 | Do. | Pegion Pea white |
| 3959 | Do. | Rosselle seeds |
| 3960 | Do. | Green Gram |
| 3961 | Do. | Gallnut (raw) |
| 3962 | Do. | Turmeric |
| 3963 | Do. | Tobacco |

## G. Ramiah Gauroo, Exhibitor.

### Tanning Substances.

3964 Divi Divi Casalpinia Coriaria Chaff of Cheroogoodee tree.

---

## Local Committee, Exhibitors.

### Mineral Kingdom.

| | | |
|---|---|---|
| 3965 | Bag | Red Limestone |
| 3966 | Do. | White Limestone |
| 3967 | Do. | Pipe clay |
| 3968 | Do. | Silicious felspar |
| 3969 | Do. | Iron ores 2 kinds |
| 3970 | Do. | Iron refined |
| 3971 | Do. | Marble stone |
| 3972 | Do. | Talc |
| 3973 | Do. | Common silicious felspar |
| 3974 | Do. | Common Quartz white |
| 3975 | Do. | Leaden Ore |
| 3976 | Do. | Graphic Granite |
| 3977 | Do. | Garnets rough |
| 3978 | Do. | Sapher Crystal |
| 3979 | Do. | Emery red and black |
| 3980 | Do. | Chalcedony |
| 3981 | Do. | Silicious Crystal |
| 3982 | Do. | Milky Quartz |
| 3983 | Do. | Rock Crystal |
| 3984 | Do. | Iron Ore another kind, |

---

## D. Vencatanurasinga Row, Exhibitor.

### Gums Series.

| | | |
|---|---|---|
| 3985 | One | Packet of Jegata trees |
| 3986 | One Do. | Mogelee trees |
| 3987 | One Do. | Munchepaula trees |
| 3988 | One Do. | Gunnaroopula trees |
| 3989 | One Do. | Barunkee trees |
| 3990 | One Do. | Munchemadee trees |
| 3991 | One Do. | Oopepala trees |
| 3992 | One Do. | Wood Apple trees |
| 3993 | One Do. | Thadlapalea trees |
| 3994 | One Do. | Margosa trees |
| 3995 | One Do. | Lac Shell |
| 3996 | One Do. | Aukoojawoodoo pauloe. |

### Medicinal Substances.

3997 One Packet Rautoory Checcah

3997½ One Packet Rachasee molataly
3997¾ One Do. Chooreegee Checcah
3998 One Do. Davadary Checcah
3999 One Do. Nulla Bulsoo Checcah
4000 One Do. Ginnee Checcah
4001 One Do. Corinda Checcah
4002 One Do. MootchatoonegeeChecccah
4003 One Do. Coramaunoo Checcah
4004 One Do. Wooroogoo Checcah
4005 One Do. Nulla Oopee Checcah
4006 One Do. Boorooga Checcah
4007 One Do. Cheroogoody
4008 One Do. Nulla Ragoo Checcah
4009 One Do. Rala Checcah
4010 One Do. Muddy Checcah
4011 One Do. Boorooga Checca
4012 One Do. Barra Doodeelem Checcah
4013 One Do. Tungadoo Checcah
4014 One Do. Hemp
4015 One Do. Cotton White.

C. Puttanah, Moochy, Exhibitor.

Toys of Different Castes.

4016 One set of Toys Palkee and Bearers Rs. 12.
4017 One Do. do Cutchetry Rs. 2-8.
4018 One Do. do Dinner party Rs. 3.
4019 One Do. do Nautch
4020 One Do. do Guard of sepoys Rs. 10.
4021 One Do. do 43 different Figures Rs. 20.
4022 One set of Toys.
4023 One Do. do
4024 One Do. do
4025 One Do. do
4026 One Do. do
4027 One Do. do
4028 One Do. do
4029 One Do. do Custard Apple with a turtle Compass.

V. Hunoomajee, Row, Exhibitor.

Animal Kingdom.

4030 One Pint Bottle of Chadoo Purgal fish Oil
4031 ⅛ Do. do Valaga fish Oil
4032 ⅛ Do do Coonwanoo fish Oil
4033 One Do. do Massoo fish Oil
4034 One Do. do Bochee fish Oil
4035 One Do. do Goodee fish Oil.

Thalethala, Paupanah, Exhibitor.

Oils Series.

4036 One Pint Cocoanut Oil Rs. 2-6.
4037 One Do Gingelly Oil As. 2.

J. Fraser, Esquire, Exhibitor.

Mineral Kingdom.

4038 One Bag white salt.

Major J. A. Gunthorpe, Exhibitor.

Drawings or Modles of Garden Implements and Tools.

4039 'Mamooty'
4040 Pick Axe
4041 Bill Hook
4042 Gabison knife
4043 Sapper knife.

Major J. A. Gunthorpe, Exhibitor.

4044 Short knife
4045 Claw Hammer with 4 Bits
4046 Iron wrench for nuts.

Major J. A. Gunthorpe, Exhibitor.

4047 Two B. Fifes in wood.

Major J. A. Gunthorpe, Exhibitor.

Cutter Edge and Hand Tools.

4048 Six gunblets of sizes
4049 One Brace wooden Carpenter
4050 One Hand Vice.

D. Venkatanursinga, Row, Exhibitor.

4051 One Jungle Cock
4052 One Great Owl
4053 One Civet
4054 One Mongoose
4055 One Copper Crow
4056 One Black Crow
4057 One Hare
4058 One Fox
4059 Two Guana Skins
4060 One Minah Common
4061 One Hawk
4062 One Water Fowl.

V. Nursigaudoo and P. Cotadoo Exhibitors

4063 Two Rats White

D. Vencatanarasinga Row, Exhibitor.

STUFFED ANIMALS AND BIRDS.

4064 One Partridge
4065 One Common Snipe
4066 One Dove Commen
4067 Two Rats Black
4068 One Squirrel
4069 One King Crow
4070 One Thrush

HORNS.

4071 One Spotted Dear

---

Local Committee Exhibitors.

4072 One Monkey
4073 One Porcupine.

---

J. Fraser Esquire, Exhibitor

4074 One Elk.

---

Bundy Doss, Exhibitor.

4075 Three Luckmook Petaloo As. 7.

---

V. Nursegaudoo and P. Catadoo Exhibitors.

4076 One Hides Bullock.

---

J. J. Cotton Esq., Exhibitor.

4077 Three Bear Skins.

---

Lieut. B. A. Moorell, Exhibitor.

4078 Jay stuffed.

---

J. J. Cotton Esquire, Exhibitor.

CORDAGE.

4079 Four Ropes made from Aloes Fibres
4080 One Rope made from Flax
4081 One Rope made from Palmira fibres
4082 One Rope Tarred made from fibres aloes.

---

Local Committee, Exhibitors.

CORDAGE.

4083 One Rope from Boustring Hemp
4084 One Rope from Benda
4085 One Do. from Lubarry
4086 One Do. from Hemp
4087 One Do. from Yerkum
4088 One Do. from Franse
4089 One Do. from Moothoomoolooko
4090 One Do. from Madabclene
4091½ One Do. from Welthoo
4091 One Do. from Apee
4092 One Do. from Jonee
4093 One Do. from Aree
4094 One Do from Palakee
4095 One Do. from Thalasee
4096 One Do. from Navale

---

M. Vencata Reddy, Exhibitor.

NATIVE MACHINES FOR MAKING CORDAGE AND ROPES.

1097 One Loom set

---

Vencata Reddy, Exhibitor.

4098 Two Black Cumblies 3-8.
4099 Twenty-five Dugalaws. of different sorts of chintzes Rs. 8.
4100 Five shalaloo of different of sorts of chintzes Rs. 9.

---

Age Mendee Saib, Exhibitor.

PRINTED CALCOLIES.

4101 One Durphurtha As. 5.
4102 One Soodamy Rs. 7.
4103 One Palanypore Rs. 8.
4104 Booksha Rs 9.
4105 One Canpose Rs. 6-8

---

Moochy Kistnamah, Exhibitor.

4106 Two Leather Condapilly Boxes Rs. 7.

---

Aga Ismael Saib, Exhibitor.

4107 One Palampore Cotton Rs. 22.

---

Midda Narsingum Exhibitor.

4108 Four Pairs Handkerchieves Rs. 2,

Jumpa Mookoondoo, Exhibitor.

4109 One Hand Stick As. 4.

Aga Ismael Saib, Exhibitor.

4110 One Lacquerred pen and ink holder Rs. 2.

P. Parthasarady Naidoo, Exhibitor.

4111 Four Ginghams Rs. 2.
4112 Palampore representing the Hindoo history of Rama Rs. 12.

P. Basavanah, Exhibitor.

EMBROIDERY.

4113 Swallow tailed Cotton Flag, wove with a selvage edge all round Rs. 3.

S. Nummiah Naidoo, Exhibitor.

4114 Ellore Patent Tapestry Rugs. Rs. 36 9-5
4115 One do do do do Rs. 30-3-2.

A. Sashiah Gauroo, Exhibitor.

4116 One Ellore Patent Tapestry Rugs Rs. 20-8-1.

Jaffer Saib, Exhibitor.

4117 One Ellore Patent Tapestry Rugs Rs. 5-8.

Syed Hoossain, Exhibitor.

4118 One Ellore Patent Tapestry Rugs Rs. 5-4

Aga Ismael Saib, Exhibitor.

4119 Palampore with Golden Ornaments Rs. 117.

Codavale Paroya, Exhibitor.

SKINS.

4120 Three Goats tanned and dyed Red Colour As. 12 each.
4121 Two Do Black Do. As. 2 each
4122 Two Do Pale yellow As. 12 each
4123 Two Do Buff Rs. 1-8.
4124 Two Do Purple. As. 12 each
4125 Two Do Yellow As. 8 each
4125½ Two Do tanned dark Green Colour As. 12.

V. Nursegaudoo & P. Cotadoo, Exhibitors.

4126 One Kid Tanned Red Colour As. 2.
4127 Five Kids with hair Rs. 1-1.
4128 Two Goats tanned white colour As. 4 each.

BOOTS AND SHOES.

4129 Two Pairs Leather Boots Rs. 4.
4130 Two Do. Shoes Rs. 2.

C. Ramasawmy Gauroo, Exhibitor.

4131 One Bell Metal Rs. 12.

Rajah Bommadavara Naganah, Exhibitor.

4132 One Rose fountain.

D. Veerasalingum Moochy, Exhibitor.

BOOK BINDING.

4133 Two Blank Note Books Rs. 2.

J. Fraser Esq., Exhibitor.

4134 One Box containing a Pair of Toasting forks.

J. J. Cotton Esq., Exhibitor.

HORNS.

4135 One (Burmese) Dhararti carved Ivory handle
4136 One Burmese Elephants Tusk carved and once guilt.

## V. Soobiah, Silver Smith, Exhibitor.

WORKS IN PRECIOUS METALS, JEWELERY &c.

4137 One Silver Venagreat Rs. 12.

---

## K. Nagabhooshanum, Exhibitor.

4138 One Silver Ancient rupee.

---

## C. Ramasawmy Gauroo, Exhibitor.

4139 Eight Ancient Copper Coins.

---

## Vencatanarasinga Row, Exhibitor.

INDIAN PLANTS YIELDING FIBRES.

| | | |
|---|---|---|
| 4140 | Franse | Shrub |
| 4141 | Palakee | do |
| 4142 | Walthoo | do |
| 4143 | Aree | do |
| 4144 | Loyaegoo | do |
| 4145 | Googillapoo | do |
| 4146 | Moodoogoo | do |
| 4147 | Cooncegee | do |
| 4148 | Tadah | do |
| 4149 | Aree | do |
| 4150 | Navalee | do |
| 4151 | Janny | do |
| 4152 | Chilkadoodega | do |
| 4153 | Booda durmee | do |
| 4154 | Talsee | do |

---

## Vencata Reddy, Exhibitor.

4155 Janapah shrub.

---

## J. Fraser, Esq. Exhibitor.

4156 Rufuse of the Fibre called Franse Nar Madabulmepar.
4157 One Do. of Boodoothremy
4158 One Do. of Loyegoo
4159 One Do. of Apee
4160 One Do Cooperee Gadee
4161 One Arwadillo
4162 One Ratary Machine for cleaning cotton.
4163 One Spinning wheel
4164 One Bag Tusks of wild Hog.
4165 One Do. of Porcupine

## Col. J. J. Cotton Esq., Exhibitor.

WEIGHING, MEASURING AND REGISTERING MACHINES.

4166 Steel yard Standard Support
4167 Do Do Pauls
4168 Plat form
4169 Pegs for the support of steel yard beam
4170 Steel yard Tongue or tell tale Dance.
4171 Steelyard minor weight to determine ounce and Pounds constant weight
4172 Steel yard Main hook.
4173 Plat form scale

---

## C. Veerasalingum, Exhibitor.

4174 Model of a Bangalow made of paste board Rs. 100

---

## Joffer Syed Cossim, Exhibitor,

4175 Rugor Carpet Rs. 5-8.
4176 Rug

---

## J. J. Cotton Esq., Exhibitor.

4177 Specimens of Ornamental Turnings

---

## Vagoo Survasa, Exhibitor.

PORCELAIN AND EARTHEN WARE.

4178 One Model of Pumpkin.
4179 Four Stags Horns
4180 Do Do Small
4181 Feathers one
4182 Do. do As. 3.
4183 Do. Rs. 1-3-6.

---

## Kistnamah Moochy, Exhibitor.

4184 A Model of the Rock and Fort of Condapilly constructed in wood Rs. 150.
4185 One Model of a house containing many Toys
4186 Specimens from the Lithographic stone.

---

SAMPLES OF CORDAGE MADE BY HAND IN THE MASULIPATAM JAIL, OF VARIOU FIBRES.

4187 Camp Chair.

# MASULIPATAM.

## J J Cotton, Esq. Exhibitor.

DRAWINGS.

Of *Wind Mill* for common use in this country, with self adjusting wind shutters and sails.

Of Cog Wheel showing a proposed improved method for their manufacture as adapted more especially for this country.

Of equirotal improved American Carriage of simple construction, in much use in Columbo, Ceylon.

Case and frame of Platform scale on 5 feet (one near centre and the other at 4 corners.)
Steel yard Beam and scale.
Four side pieces of do.
"Support" for main beam of do.
One "constant weight (27½) lbs. for do

SPECIMENS OF ORNAMENTAL TURNINGS.

4172 One Vase Ivory
One Ring stand do.
One Box do. with dredwood centre
One Paper weight Ivory
One Tazza Ivory with wood pedestal
One Ebony box

*BELONGING TO STEEL YARD.*

4173 *Steel yard Chain for scale*
*A Chain in 4 lengths*
*A main beam hook*
*Traversing beam for constant weight*
*Wooden Press for the "support" of of the beams*

BELONGING TO PLATFORM SCALE.

4174 Standard pillar
Index rod
Connecting rod
Two 1 lb. brass weights
One 4 oz. do.
One hook (4 oz. for the above "constant weights"
Trimming weight and slide (wire)
Screws &c.

---

## Local Committee, Exhibitors.

8844 Indian corn 2 kinds Red and white
8845 Great Millet 2 kinds yellow and white.

---

## D. Vencatanurasinga Row, Exhibitor.

TIMBER AND FANCY WOODS.

8846 Bootankoosham currah.
8847 Billoodoo currah.
8848 Tedlapala currah.

## V. Venkata Row Puntooloo Exhibitor.

8849 Array currah.

---

## V. Vencatanurasinga Row, Exhibitor.

8850 Tookee currah.

---

## V. Vencata Row Puntooloo Exhibitor.

8851 Goompiny currah.
8852 Goomeedee currah.

---

## D. Vencatanurasinga Row, Exhibitor.

8853 Toda currah.
8854 Wuddee currah.
8855 Teak wood.
8856 Weltoory currah.
8857 Cheroomaunoo currah.
8858 Jittasy currah.
8859 Peddavasee currah.
8860 Chanda currah.
8861 Bundaroo currah.
8862 Koreevee currah.

---

## Agi Emendi Sahib, Exhibitor.

SHELLAS OF DIFFERENT SORTS, VIZ.

8863 Goal Bunnush Rs. 9.
8864 Bundoosoosane Rs. 8.
8865 Sagool valeja chaya Rs. 12.
8866 Iamarud Binga valija Rs. 9.
8867 Nausoo Bootadar collunkury Rs. 10.

DAGALAWS OF DIFFERENT SORTS, VIZ.

8868 Doozem Bootadar Rs. 4.
8869 Beyem Bootadar Rs. 4.
8870 Rajakhema Bundie Rs. 5.
8871 Goolbunnush Raja Kakaneyr Rs. 4.
8872 Mans Mauder Butcha Boota Rs. 6.
8873 Maya Poosh veleja Rs. 6-8.
8874 Janeen Abeena SoothorBoota Rs. 6.
8875 Bunnush Bungavalijal Rs. 6-8.
8876 Boota khana Bundie Rs. 4.
8877 Mooshel khana Bundie Goolabee Rs. 4.
8878 Khana Bundie Rs. 5.
8879 Kollemkhor Bootadur Rs. 5.
8880 Baledar Boota Ambercha Rs. 5.
8881 Goolabee Ubberkhana Rs. 4.
8882 Raja Goolbunnush voleja Rs. 4.
8883 Baildar Boota Ubbee Khana Rs. 5.
8884 Ubbe Kakany Rs. 5.

8885 Gool soorak kotha khaul Bundie Rs 5.
8886 Boota Ubbeekhal Rs. 4.
8887 Soodarush khana Bundie Goolabee Rs. 4.
8888 Boota Chinthokey Rs. 4.
8889 Ake Goolkhana Bundie Rs. 5.
8890 Bunnush Maya Poosh volejal Rs. 6.
8891 Raja Binga voleja Rs. 5.
8892 Boota Dar Rs. 4.

Aga Esmael Sahib, Exhibitor.

ARTICLES OF CURIOSITY.

8893 Ink stand of wood Rs. 2.

Pitcheka Moosalee, Exhibitor.

8894 Ginghams or Checks Rs. 2.

J. J. Cotton, Esquire, Exhibitor.

HYDRALIC MACHINES, MODELS OR DRAWINGS.

8895 Equirotal American Carriage.
8896 Wind Mill for bruising crushing "copra"
8897 Cog wheel.

B. Bhaarasauray, Exhibitor.

8898 Engravings "The stag" Rs. 25
8899 Engravings "Le Toucher" Rs. 50.

D. Venkatanursinga Row, Exhibitor.

8900 Poosooka checcah.

Aga Esmael Sahib, Exhibitor.

8901 Palempore Printed Rs. 22.

Major J. A. Gunthorpe, Exhibitor.

MISCELLANEOUS MANUFACTURES.

8902 Models Figures of the different castes of India made at cendapilly Rs. 150.

Rajah B. Naganah Naidoo, Exhibitor.

8903 Model of an upstair Bungalow with Figures representing a party of Gentlemen and Ladies.

## EXPLANATION OF THE DRAWINGS OF "IMPROVED SECTION COG WHEEL", BY MR. J. J. COTTON.

As it is often of great importance as well as of necessity to have much of the Machinery of Mill work, particularly in this country, made of wood, for facility of repairs, &c., I venture to suggest the following plan for the construction of wooden Cog Wheels.

The rim of these is usually made of cast iron in a single casting, and many difficulties present themselves in making moulds with sufficient accuracy and correctness, to obviate these, I propose that

The entire rims of such wheels should be cast in double or two *Sections* of ¼, ½, or even the whole circumference required, according to size and convenience of carriage subsequently, or other causes.

The *Sections* of each wheel should all be made of one pattern so that they may be adapted to and should fit any other similar portion of the same wheel. The Joints of one Section should directly intersect the segment above, at the centre of that Section and vice versa all round the wheel ; the spaces, for the insertion of the cogs being correspondent with each other. The shoulders or shoe for carrying the spokes or arms of the wheel should be made with a similar view of fitting over one another in the several "Sections"

when properly joined together; holes should be drilled for bolts at certain fixed distances through the rims of the "Sections" also corresponding with one another. The axle may be constructed of either plate and angle iron, or of wood with iron clamps.

The above when carefully and firmly screw-bolted together, with the radii fixed and adjusted, would I imagine, prove equally efficacious with the wheels now commonly in use.

The advantages offered by the above plan are, first, the greater facility of making the patterns in dividing off the "spaces" as well as sockets for the cogs, secondly, the greater facility in making the moulds therefrom for the castings, and thirdly, the economy which would follow in the event of any accidents occurring to any portion of the wheel, which might here be replaced at a fraction of the cost of a new Wheel.

Those at a distance from Founderies, &c., would find it of much advantage to have a spare "Section" of such Wheels on hand, when ordering sets for Machinery.

J. J. COTTON,

Masulipatam, 15th January 1857.

---

## DESCRIPTION OF EQUIROTAL IMPROVED AMERICAN CARRIAGE IN USE IN CEYLON.

Height of wheels 4 feet and 5½ feet a part distance between fore and hind wheels, 6 inches

| | | |
|---|---|---|
| Length of seats | 34 | (inches) |
| Width Do | 19 | (back) |
| " | 18 | (front) |
| Serch | 4½ | (feet) |

One single grass hopper spring 3½ feet long is fixed by centre blocks in front and the same behind on the axles.

1. The body is made entirely of 3 pieces of angle irons, one on each side and one in the centre, of the shape marked A A A A with the necessary cross bars and hand rails.

The hood is made in the same way of three single pieces of angle iron H H H with cross bars at each end, and one in the centre 3 feet 4 high in the clear and is covered, as far as shown with white, or sky blue, painted canvas D D D the whole attached by screws and nuts to the body, and removable at pleasure.

3. The Wheels are constructed of the lightest wood compatible with strength.
2. B is a "tie bar," in the centre only.

3. C Under the 3 hind seat is a small box or boat, of wood.

4. The angle iron frame work is rattaned at the back of the seats, the part marked E is made also of 3 angle iron rings rattaned all round, being hollow in the centre.

5. Either one or two horses, are used.

4. The shafts or pole are attached at once to the fore axle, by a very short splinter bar.

5. In getting in or out of the front seat it is necessary to move the wheels on one side, to enable the individual to mount by the steps.

6. It is an exceedingly light, airy, and comfortable conveyance, over any kind of road and if properly put together, is exceedingly strong and lasting.

J. J. COTTON,

Masulipatam, January 15th 1857.

---

## MEMORANDUM, AND DESCRIPTION OF WINDMILL WITH SELF-ADJUSTING SAILS, &c., &c.

The great object in view in constructing any Machinery for this country, should be *simplicity* in all its details; and consequent facility in both its manufacture in the first place, and repairs on the spot when necessary, in the second.

There should be as little iron work about the whole as possible, except what can be readily manufactured here. I suggest therefore, that all the driving and other Cog Wheels empolyed in the Mill, should have wooden cogs, and be made on the principle shown in the "Improved Section Cog Wheel."

The size and dimensions of the Windmill must depend on the nature of the work required to be performed, and the materials procurable. The construction of it should be left to those conversant in the matter. The *great* want in Madras at present is, in my opinion, a competent Millwright; though by the aid of works treating of the subject, there should not be any great difficulty in erecting a Windmill, with its whips, &c, at the proper angle laid down.

The difficulty with regard to wind power has been in regulating its extent. The self-adjusting fans, shown in the accompanying drawings, I find are of very old invention, but from their simplicity, I believe they are more adapted to the wants of India, and more easily constructed and eventually repaired, than those of a more complicated nature in use in Europe. For the same reason, I advocate the rack and pinion for moving round the cap of the Mill, in preference to the self-acting Machinery, which possibly might get out of order, without the means being at hand to repair it; and the simplest kind of "break" I would recommend that, in connection with a weather cock on the top of the cap, there should be a corresponding index inside, to show in what direction to move the cap, by means of the rack and pinion, to set the arms of the Mill in the correct direction, with the wind.

With regard to the self adjusting whips. The surface exposed occupies, as will be seen on reference to the drawing, a certains but differing expanse across the main spar, and is in the shape of rectangular trapezium, in the proportion of ½ on the exterior to ¼ on the interior angle that the plane of the sail makes with the surface. The latter expanse should be constructed on the same principle as venetian shutters, but that they may be lighter, I suggest that they should be of substantial frame work, with canvas fastened over them. The hinge pin should be about ¼ or ⅓ from the upper ledge of the shutter and moving freely in the sockets: a projecting staple from the centre of the upper ledge of each shutter, should be connected by a light chain and passing through a roller at the several divisions of the great fan be attached to some sort of spring, of sufficient strength, to keep the whole closed, when a moderate breeze was blowing; but capable of allowing the shutters to be forced open by degrees as the strength of the wind increased; closing

again when it fell. When the Mill is at rest and not required for work, the above chain may be unfastened, and another attached to the bottom of the shutters at their back drawn up. and hitched, so as to leave the shutters completely open, with no surface for the wind to act on.

On the opposite side of the spar where the surface exposed is only ½ I suggest simply stretching canvas soils over a frame work, which could be furled or rolled up when the Mill was required to be at rest.

The several divisions of the whips should be made to correspond with the *floors* in the Mill, so as to enable the work people to get at the apparatus for geering and ungeering the shutters.

It might be found expedient to use cylendrical hollow cast iron shafts, in separate pieces in preference to large wooden spars, (for carrying the machinery) which must of necessity be very bulky.

For all the minor details, as to the arrangement of the machinery for the different work to be performed, it is of course left to the discretion of the Engineer and Mechanic to determine. But I imagine great facilities for cleaning paddy, sawing timber, working looms. paper making, rope making, oil crushing, &c.. &c., are attainable through the aid of such wind power, and I conceive that with its appurtenances it would require the least possible superintendence and skill. of any kind of Machinery which is the one great object of the suggestion, and the first expense would be, comparatively speaking, the last.

J. J COTTON.

Masulipatam, January 15th 1857.

---

# INSTRUCTIONS TO PUT THE STEEL YARD (C. PAUL'S. AND FOR ITS USE.

Suspend the Beam by the hook to a cross beam or chain, about 6 feet 6 inches from the ground—so that when the scale is attached by the chains, it may hang about 6 inches clear from the floor. (The folding sides of the scale are useful in placing upon, or removing from the scale, bulky articles as bales.) Place the "support" at any convenient distance, so that the main beam may move up and down the slot left for the purpose freely, a woodden pin being put through the holes, to prevent too much vibration of the balance. The steel yard thus put up will *nearly* trim itself. Correct the error by any convenient and necessary weight at hand.

The large weight, together with the traversing hook, (the roller of which should be slightly oiled when being fixed) will indicate 7 lbs. additional at every division across the top of the beam, measuring from the fulcrum. Should this large weight so placed on any of these divisions prove to be near, but more than the weight of the article in the scale, place it *back* one division, and with the small weight and hook, ascertain at what minor subdivision from the tongue, the true weight is indicated (the subdivisions are marked to indicate lbs. and their fractions) the total exhibited by the two weights, is equal to that in the scale.

For a description of C. Paul's steel yard, see Dr. Lardner's Cabinet Cyclopædia, Mechanic's p. 296, et seq.

J. J. COTTON,

Masulipatam, 22d December 1856.

MASULIPATAM.

# DIRECTIONS FOR THE STEEL YARD (C. PAUL'S.)

Suspend the Beam by the hook to a cross beam or chain, for the purpose about 6 feet 6 inches from the ground, so that the scale when attached by the chains, may hang full 6 inches clear of the floor. The folding sides of the scale are useful in placing upon, or removing from the scale, large and bulky articles—bales, &c. Place the support at any convenient distance, so that the main beam may move up and down the slot left for the purpose—touching the sides if possible. Wooden pin being put through the holes sufficiently apart to prevent too much vibration of the balance.

The steel yard thus set up will *nearly* trim itself. Correct the error if any by the necessary weight and it is ready for use.

The large weight (constant weight) together with the traversing hook (the roller of which should be slighty oiled when being fixed) will indicate 7 lbs. additional at every division across the top of the beam, measuring from the tongue or tell tale. Should the large weight so placed on any of these divisions pour to be near but *more* than the weight of the articles in the scale place it *back* one division—and with the small weight and hook ascertain at what minor subdivision from the tongue the true weight is down. The subdivisions are marked to indicate lbs from 1 to 7 and their fractions; the total thus exhibited by the two weights—is equal to that of the article in the scale.

For a description of C. Paul's steel yard see Dr. Lardner's Cabinet Cyclopædia, Mechanic's p. 296 et sequitur.

J. J. COTTON,

Masulipatam, December 1856.

# INSTRUCTIONS FOR THE PLATFORM SCALE.

First to put it together.

Unscrew 8 *screws* to be seen. round the *upper* part of the box containing the Machinery, which will release the platform—next unscrew the block of wood across the back of the box, and release the iron rod which there projects.

After opening the "case" which contains the pillar and other apparatus and taking out the contents, open the lid of the box at the top of the pillar and slipping up the front slide take out what things may be found therein, viz the index rod. the connecting rod, the constant weights, trimming weight, and wire ring a brass hook, &c. Next unscrew the 4 lower screws at the back of the pillar. and remove the portion of plank which this will detach. and take out any other &c., that may have slipped down the slot, which may thus be examined to see if it is clear throughout. Then attach the standard pillar to the box, over the projecting iron bar, at the place indicated—by 6 strong screws: fix the brass hook in the back of the pillar on which to hang the weights, &c. Next having hooked one end of the connecting rod to the index rod, slowly drop the other down the slot in the pillar till the fulcrum rests on the supports. An attendant may then attach the lower and longer hook to the eye in the projecting iron bar below—replace the lower portion of the back board by the 4 screws, slip in the sliding front of the upper box, with the "set square" outside, and close the lid. (The spare lb. weights may be placed inside the box.) Trim the index rod by the small weight for the purpose, and the scale is ready for use.

## DIRECTIONS.

The simple iron hook (4 oz.) indicates lbs. on each of the divisions marked.
By adding the small weight (4 oz.) the result shown must be doubled.
The 1 lb. weight on the iron hook indicates five times the amount shown on the rod
And 2 lbs. and 4 oz. on the same hook makes a multiple of 10 for the same.

It will be thus seen that 5 lbs. would weigh 3,000 lbs., if the machinery could support this great weight.

N B.—When not in use please to replace the weights and hooks on theback of the pillar.

J. J. COTTON

Masulipatam, December 22d 1856.

# DIRECTIONS FOR THE PLATFORM SCALE.

First to put it to together.

Unscrew 8 *long screws* to be seen round the *upper* part of the box containing the machinery which will release the platform or top of the box. Next unscrew the block of wood across the back of the box, and release the iron rod which there projects.

After opening the long" case" which accompanies the above and taking out the contents carefully, open the lid at the top of the standard pillar and slipping up the front sliding plank, take out what things may be found inside, viz the index rod. the connecting rod. the weights, trimming weight, a brass hook, screw. &c. The hook for the constant weights will also be found inside the pillar—uncrew the 4 lower screw, at the back of the pillar and remove the portion of plank which will thus be detached—take out any other, &c, which may have slipped into the slot—which may also be examined to see that it is clear throughout. Then attach the standard pillar to the "box" over the projecting bar at the place indicated by 6 strong screws. Then having hooked one end of the connecting rod to the " index" rod, slowly drops the other down the slot in the pillar. till the fulcrum rests on the supports. An attendant may then attach the lower *and longer* hook to the edge on the projecting iron bar. Replace the lower portion of the back plank by the screws Slip in the sliding front of the upper box with the " set square" outside and close the lid, (the spare 1 lb. weights may be placed inside the box ) Trim the index rod by the small weight for the purpose and the scale is ready for use. (Screw in the brass hook on the back of the Pillar.)

The simple iron hook (4 oz ) indicates lbs. on each of the divisions marked on the arm.

By adding the small weight (4 oz.) *the* result shown must be doubled.

The 1 lb. weight on the iron hook indicates 5 times the number of lbs. marked on the rod.

Two lbs. and 4 oz. on the iron hook makes a multiple of 10 per the same numbers.

(Five lbs. would thus weight 3000 lbs. if the machinery could support ten weight )

N. B.—We have not in use please to release the weights and hook on the back of the Pillar.

J. J. COTTON,

Masulipatam, December 1856.

# NELLORE.

*Exhibition Nos. corresponding with those of Local Committee.*

| Local Committee No. | Progressive Exhibition No. |
|---|---|
| *Medicinal Oils, Gums, &c.* | |
| 1 | 2074 |
| 2 | 2075 |
| 3 | 2076 |
| 4 | 2077 |
| 5 | 2078 |
| 6 | 2079 |
| 7 | 2080 |
| 8 | 2081 |
| 9 | 2082 |
| 10 | 2083 |
| 11 | 2084 |
| 12 | 2085 |
| 13 | 2086 |
| 14 | 2087 |
| 15 | 2088 |
| 16 | 2089 |
| 17 | 2090 |
| 18 | 2091 |
| 19 | 2092 |
| 20 | 2093 |
| 21 | 2094 |
| 22 | 2095 |
| 23 | 2096 |
| 24 | 2097 |
| 25 | 2098 |
| 26 | 2099 |
| 27 | 2100 |
| 28 | 2101 |
| 29 | 2102 |
| 30 | 2103 |
| 31 | 2104 |
| 32 | 2105 |
| 33 | 2106 |
| 34 | 2107 |
| 35 | 2108 |
| 36 | 2109 |
| 37 | 2110 |
| 38 | 2111 |
| 39 | 2112 |
| 40 | 2113 |
| 41 | 2114 |
| 42 | 2115 |
| 43 | 2116 |
| 44 | 2117 |
| 45 | 2118 |
| 46 | 2119 |
| 47 | 2120 |
| 48 | 2121 |
| 49 | 2122 |
| 50 | 2123 |
| 51 | 2124 |
| 52 | 2125 |
| 53 | 2126 |
| 54 | 2127 |
| 55 | 2128 |
| 56 | 2129 |
| 57 | 2130 |
| 58 | 2131 |
| 59 | 2132 |
| 60 | 2133 |
| 61 | 2134 |
| 62 | 2135 |
| 63 | 2136 |
| 64 | 2137 |
| 65 | 2138 |
| 66 | 2139 |
| 67 | 2140 |
| 68 | 2141 |
| 69 | 2142 |
| 70 | 2143 |
| 71 | 2144 |
| 72 | 2145 |
| 73 | 2146 |
| 74 | 2147 |
| 75 | 2148 |
| 76 | 2149 |
| 77 | 2150 |
| 78 | 2151 |
| 79 | 2152 |
| 80 | 2153 |
| 81 | 2154 |
| 82 | 2155 |
| 83 | 2156 |
| 84 | 2157 |
| 85 | 2158 |
| 86 | 2159 |
| 87 | 2160 |
| 88 | 2161 |
| 89 | 2162 |
| 90 | 2163 |
| 91 | 2164 |
| 92 | 2165 |
| 93 | 2166 |
| 94 | 2167 |
| 95 | 2168 |
| 96 | 2169 |
| 97 | 2170 |
| 98 | 2171 |
| 99 | 2172 |
| 100 | 2173 |
| 101 | 2174 |
| 102 | 2175 |
| 103 | 2176 |
| 104 | 2177 |
| 105 | 2178 |
| 106 | 2179 |
| 107 | 2180 |
| 108 | 2181 |
| 109 | 2182 |
| 110 | 2183 |
| 111 | 2184 |
| 112 | 2185 |
| 113 | 2186 |
| 114 | 2187 |
| 115 | 2188 |
| *Seeds.* | |
| 1 | 2189 |
| 2 | 2190 |
| 3 | 2191 |
| 4 | 2192 |
| 5 | 2193 |
| 6 | 2194 |
| 7 | 2195 |
| 8 | 2196 |
| 9 | 2197 |
| 10 | 2198 |
| 11 | 2199 |
| 12 | 2200 |

# NELLORE.

*Exhibition Nos. corresponding with those of Local Committee.*

| Local Committee No. | Progressive Exhibition No. |
|---|---|
| 13 | 2201 |
| 14 | 2202 |
| 15 | 2203 |
| 16 | 2204 |
| 17 | 2205 |
| 18 | 2206 |
| 19 | 2207 |
| 20 | 2208 |
| 21 | 2209 |
| 22 | 2210 |
| 23 | 2211 |
| 24 | 2212 |
| 25 | 2213 |
| 26 | 2214 |
| 27 | 2215 |
| 28 | 2216 |
| 29 | 2217 |
| 30 | 2218 |
| 31 | 2219 |
| 32 | 2220 |
| 33 | 2221 |
| 34 | 2222 |
| 35 | 2223 |
| 36 | 2224 |
| 37 | 2225 |
| 38 | 2226 |
| 39 | 2227 |
| 40 | 2228 |
| 41 | 2229 |
| 42 | 2230 |
| 43 | 2231 |
| 44 | 2232 |
| 45 | 2233 |
| 46 | 2234 |
| 47 | 2235 |

*Gums.*

| | |
|---|---|
| 1 | 2236 |
| 2 | 2237 |
| 3 | 2238 |
| 4 | 2239 |
| 5 | 2240 |
| 6 | 2241 |
| 7 | 2242 |
| 8 | 2243 |

| Local Committee No. | Progressive Exhibition No. |
|---|---|
| 9 | 2244 |
| 10 | 2245 |
| 11 | 2246 |
| 12 | 2247 |

*Oils.*

| | |
|---|---|
| 1 | 2248 |
| 2 | 2249 |
| 3 | 2250 |
| 4 | 2251 |
| 5 | 2252 |
| 6 | 2253 |
| 7 | 2254 |
| 8 | 2255 |
| 9 | 2256 |
| 10 | 2257 |
| 11 | 2258 |
| 12 | 2259 |
| 13 | 2260 |
| 14 | 2261 |
| 15 | 2262 |
| 16 | 2263 |
| 17 | 2264 |
| 18 | 2265 |
| 19 | 2266 |
| 20 | 2267 |
| 21 | 2268 |
| 22 | 2269 |
| 23 | 2270 |
| 24 | 2271 |
| 25 | 2272 |
| 26 | 2273 |
| 27 | 2274 |

*Sundries.*

| | |
|---|---|
| 1 | 2275 |
| 2 | 2276 |
| 3 | 2277 |
| 4 | 2278 |
| 5 | 2279 |
| 6 | 2280 |
| 7 | 2281 |
| 8 | 2282 |

| Local Committee No. | Progressive Exhibition No. |
|---|---|
| 9 | 2283 |
| 10 | 2284 |
| 11 | 2285 |
| 12 | 2286 |
| 13 | 2287 |
| 14 | 2288 |
| 15 | 2289 |
| 16 | 2290 |
| 17 | 2291 |
| 18 | 2292 |
| 19 | 2293 |
| 20 | 2294 |
| 21 | 2295 |
| 22 | 2296 |
| 23 | 2297 |
| 24 | 2298 |
| 25 | 2299 |
| 26 | 2300 |
| 27 | 2301 |
| 28 | 2302 |
| 29 | 2303 |
| 30 | 2304 |
| 31 | 2305 |
| 32 | 2306 |
| 33 | 2307 |
| 34 | 2308 |
| 35 | 2308½ |

*Stores, &c.*

| | |
|---|---|
| 1 | 2309 |
| 2 | 2310 |
| 3 | 2311 |
| 4 | 2312 |
| 5 | 2313 |
| 6 | 2314 |
| 7 | 2315 |
| 8 | 2316 |
| 9 | 2317 |
| 10 | 2318 |

*Cloths.*

| | |
|---|---|
| 1 | 2319 |

Classified List of the principal articles procurable in the Nellore District.

### Mineral Kingdom.

1 Iron Ores and Iron,
2 Copper ore.
3 Charcoal,
4 Saltpetre.
5 Fullers earth or Soudoo.
6 Emery or Cooroovindarcy,
7 Lime, or Chunam,
8 Gaujoo Roy, of the colours of which native bangles are made,
9 Talc or Abracum,

### Vegetable Kingdom.

#### Condiments.

1 Chillies,
2 Ginger,
3 Onions,
4 Turmeric,
5 Betel leaf,

#### Fecula.

1 Sweet Potatoes or Ganoesoogedda.
2 Arrowroot,

#### Sugar Series.

1 Juice of Wild Date Tree,
2 Juice of Palmira Tree,

#### Gums.

1 Gum of Thoomma Tree,

#### Oil Series.

1 Sesamum or Noovvooloo Oil,
2 Ippa Oil.
3 Neem or Vapa Oil,
4 Lamp Oil,
5 Linseed or Avesa Oil,

#### Dyes &c.

1 Chayroot,
2 Catchou or Cachoo,
3 Indigo,
4 Muddeeheeca or bark for dying Red
5 Sooroogoodooheeca or bark for dying Pink,
6 Alliankoo,

### Indian Plants yielding fibres.

1 Wild Aloe or Calabanda,
2 Plaintain Tree,
3 Yereum or Jilladoo,
4 Hemp or Janapa,
5 Cannabis Saliva or Gongoo,

### Timber.

1 Sundanum or Red Wood,
2 Tamba,
3 Inamatti,
4 Caraca,
5 Tooky,
6 Yapee,
7 Neradoo,
8 Ippa,
9 Toomma,

### Pulses.

1 Paddy of sorts,
2 Jonnaloo or great millet,
3 Horse gram,
4 Varegaloo or wild kidney bean,
5 Aulloo or Paspalum frumentaleum,
6 Sujjaloo or Cumboo,
7 Ragooloo or Natchenny,
8 Pasaloo or Greengram,
9 Minoomooloo or black gram,
10 Caramuloo, a black species of pulse,
11 Corraloo,
12 Cundooloo or red gram,
13 Chunagaloo or Bengal gram,
14 Allasen Laloo a white species of pulse,
15 Samooloo or millet Panicum,

### Animal Kingdom.

1 Buffaloe horns,
2 Do. Skins,
3 Bullock Skins,
4 Sheep Skins,
5 Goat Skins,
6 Honey,
7 Wax,
8 Wool of the Country Coorpa Sheep,
9 Blankets or Cumblies,

Furnished by H. Young, Esquire, Member of the Nellore Local Committee at a cost of Rs. 38 - 12 from the funds placed at the disposal of the Local Committee. To be disposed of by the Committee for the Madras Exhibition at their discretion.

MEDICINAL OILS, SEEDS, GUMS, BARKS, &c. PROCURED IN THE NELLORE DISTRICT.

1 Sathapacoo or Rue,
2 Brummathonda Valloo,
3 Munga Varoo,
4 Pamoogudda,
5 Boocheckragudda,
6 Yesoovara Valloo,
7 Manpussoopoo,
8 Chetigara Valloo,
9 Teliagunjaroo Valloo,
10 Thapasee Checka,
11 Bodatharam Valloo,
12 Naramamidi Checka,
13 Podaputhry,
14 Mooshtee Checka,
15 Chitharamoolum,
16 Visha Bodday Valloo,
17 Rala Checkah,
18 Purpatacum,
19 Pennaroo gudda,
20 Dooroodagondee Valloo,
21 Cowhage,
22 Sara-aparilla Roots,
23 Sonty or Dry Ginger,
24 Thoonga Moshtalloo,
25 Cushtoory pussoopoo,
26 Cunnacomarigudda,
27 Chathoopoliah,
28 Naragoonjee,
29 Curpooravally,
30 Thellavooppy,
31 Nullapadamully,
32 Colamoockee Checkah,
33 Nalathungadoo,
34 Wasa,
35 Vadooroovooppoo,
36 Padamaunee Checka,
37 Maradoo Checka,
38 Audivimonaga Valloo,
39 Thellagooriginja Valloo,
40 Yanooga Culbundah Valloo,
41 Thellagantanee Valloe,
42 Goodapaula Valloo,
43 Velloo[illegible] Valloo,
44 Pa[illegible]
45 Checkee[illegible] Valloo,
46 Thellathagada,
47 Paulagoommadee Valloo,
48 Pa[illegible]moothonda Valloo,
49 Th[illegible]ooloogoodoo Valloo,
50 Muncheegoommadee Valloo,
51 Golimede Valoo,
52 Paulachettoo Valloo,
53 Nalagolimede Valloo,
54 Vauvele Valloo,
55 Davadari Valloo,
56 Paddagaura Valloo,
57 Maradoo Valloo,
58 Sooriâ Cantha Valloo,
59 Vishnoo Cantha Valloo,
60 Dunthe Valloo,
61 Molaca Valloo,
62 Chery Valloo,
63 Chetimoti Valloo,
64 Paupara Valloo,
65 Vapa Valloo,
66 Caunooga Valloo,
67 Auvese Valloo,
68 Toolasee Valloo,
69 Gutcha Valloo,
70 Gungaravee Valloo,
71 Therasurroopoo Checkah,
72 Woosireca Checkah,
73 Auticamaumidi Valloo,
74 Moondlagolimede or Gobhee Valloo
75 Pullaroo Valloo,
76 Guljaroo Valloo,
77 Murry Woodaloo,
78 Pitchica bera Valloo,
79 Moonaga Valloo,
80 Vacoodoo Valloo,
81 Paupara Valloo,
82 Nallaroo Valloo,
83 Nala Woosireca Valloo,
84 Moondlagointa Valloo,
85 Woommadi Valloo,
86 Humsapadee Valloo,
87 Cheticasarapoo Valloo,
88 Auroothonda Valloo,
89 Yanooga pullaroo Valloo,
90 Gorinta Valloo,
91 Padamully Valloo,
92 Thellapadamully Valloo,
93 Thekala Valloo,
94 Thoottara Valloo,
95 Thooreda goondi Valloo,
96 Goonta galajari Valloo,
97 Garica Valloo,
98 Neeli Valloo,

109 Vempali Valloo,
100 Thella Vempali Valloo,
101 Vominta Valloo,
102 Nalapoonna Valoo,
103 Chadarasee Valloo,
104 Neolivempali Valloo,
105 Currapacoo,
106 Culbunda,
107 Thella garica Valloo,
108 Woodymanoo Cheek,
109 Cullasa Valloo,
110 Nalavalaga Valloo,
111 Nulla thagada Valloo,
112 Noogoothasa Valloo,
113 Autipity Valloo,
114 Coosama Valloo,
115 Anthurthamara Valloo,

## Seeds.

1 Curruckayaloo,
2 Visha Cundrycaloo,
3 Paupada Vittooloo,
4 Coosama Vittooloo,
5 Mooshtee Vittooloo,
6 Soapoo or Aniseed,
7 Ranoocaloo,
8 Daneyaloo or Coriander,
9 Varagogoo,
10 Woosireea puppoo,
11 Vomum,
12 Coorunjee Vomum,
13 Codicapaloo,
14 Novooloo,
15 Munga Cayaloo,
16 Neroodi Vittooloo,
17 Thosa Vittooloo or Cucumber seeds
18 Auvaloo or Mustard,
19 Roodrajada Vittooloo,
20 Tuckolaloo,
21 Lavungaloo,
22 Pullaroocayaloo,
23 Neeroogobbee Vittooloo,
24 Thella Auvaloo,
25 Jaflara Vittooloo,
26 Soye Vittooloo,
27 Audaloo,
28 Cowhage seeds or Dooroodagoondee Vittooloo,
29 Vacoodoo Vittooloo,
30 Castor seeds or Chetamidaloo,
31 Yesapoogooloo,
32 Nulla jelacara,
33 Napalaloo or Croton seeds,
34 Cooncoodoo Vittooloo or soap nuts
35 Tody Cayaloo,
36 Moodoogpoovoo,
37 Jedivittooloo,
38 Garacayaloo,
39 Maradoo Caya,
40 Rala Caya,
41 Pippaloo or Long peppers,
42 Murry Caya vittooloo,
43 Cooganeeroo,
44 Rategoonnor,
45 Rateparoogoo,
46 Ratinara,
47 Rati poovoo,

## Gums.

1 Cathara gondoo or Badum Gum,
2 Googilum,
3 Vapa Bunckah,
4 Toomma Bunckah,
5 Tella googilum,
6 Cauroo Ingoova,
7 Booraga Bunckah,
8 Moosambrum,
9 Madooga Bunckah,
10 Maumedi Bunckah,
11 Moonaga Bunckah,
12 Valaga Bunckah,

## Oils.

1 Cocoanut,
2 White Avesa Seeds,
3 Neem or Margosa,
4 Mustard,
5 Cucumber,
6 Illoopoo,
7 Caju,
8 Eggs,
9 Poonga,
10 Maulkunganee,
11 Gingelly,
12 Ground nut,
13 Onions,
14 Garlic,
15 Castor,
16 Benjamin,
17 Kushkhus,
18 Prickly poppy,
19 Grass,
20 Cloves,
21 Sandal wood,
22 Lime peel,
23 Poppy Seeds,
24 Orange,

25 Nutmegs,
26 Jessamine,
27 Sweet fennel flower,

OBTAINED ELSEWHERE.

1 C[illegible]oovaga, Salem,
2 Sevium, Malayalem,
3 Mody, Budrachellum,
4 Jacarianey, Singapore,
5 Chungulva coshtoo, Bombay,
6 Anthevasa, Bellary,
7 Dalchinnycheeka or Cinnamon, Malayalum,
8 Catacaroheence, Singapore,
9 Purrunghee cheeka, China,
10 Parunghee, Guntoor,
11 Nauhlee, Coorg,
12 Ravalachinny, Persia,
13 Summarashtacum, Chandaraghery,
14 Doomparashtacum, Do.
15 Akelakurrah, Bombay,
16 Anthemadocrum, Bengal,
17 Corasawnee Vonum, Teroopatty,
18 Macheesyaloo, Coorg,
19 Naggeasaraloo, China,
20 Japuthry, Malayalum,
21 Sullavamerialoo, Do.
22 Vaye lavungaloo, Bombay,
23 Jelacara or Cummuinseeds, Bellary,
24 Jajecaya or Nutmeg, Malayalum,
25 Merialoo or pepper, Do.
26 Cooncoomapoovoo, Bengal,
27 Yalacayloo or Cardamon seeds, Manontoly,
28 Nalla cauchoo, Bellary,
29 Mahssauchee, China,
30 Ingoova, Arabia,
31 Thella cauchoo, Bellary,
32 Baulinthaboloo, Arabia,
33 Oil country linseed, Juggiahpettah,
34 Do. Teak wood, Combatore,
35 Do. Earth, Do.

## SPECIMENS OF STONES, &c.

Furnished by F. H. Crozier, Esquire, Member of the Nellore Local Committee at a cost of Rs 12-3- from the funds placed at the disposal of the Local Committee. To be disposed of by the Committee for the Madras Exhibition at their discretion.

| | No. |
|---|---|
| Specimens of Dodechedron Garnet from the Oodiagherry Hills. | 9 |
| Do. of Soap Stone and Ochre from Doograzpatam. | 4 |
| Do. of Dodechedron Garnet from Sydapurum. | 6 |
| Do. of Heavy spur from Ravoor Talook. | 2 |
| Do. of Emery and Horn stone from the Talook of Caligherry. | 4 |
| Do. of Stones from Sungum. | 1 |
| Do. of Do. from Dursichendaloor. | 2 |
| Do. of Do from Nellore Talook. | 6 |
| Cement from the Common bush Cactus | 6 |
| Paper made in the Jail from wild thistles mixed with old net, Sheets, | 12 |

## CLOTH.

Furnished by F. B. Elton, Esquire, Member of the Nellore Local Committe at a cost of Rs. 18-4- from the funds placed at the disposal of the Local Committe. To be disposed of by the Committee for the Madras Exhibition at their discretion.

1 Piece of fine muslin.

## SUPPLEMENT TO NELLORE.

*Exhibition Nos. corresponding with those of Local Committee.*

| Local Committee No. | Progressive Exhibition No. |
|---|---|
| 1 | 8391 |
| 1 | 8392 |
| 3 | 8399 |
| 1 | 8389 |
| 1 | 8390 |
| 2 | 8396 |
| 2 | 8393 |
| 4 | 8397 |
| 2 | 8402 |
| 3 | 8394 |
| 2 | 8395 |
| 4 | 8398 |
| 4 | 8400 |
| 4 | 8401 |
| 55 | 8403 |
| 44 | 8404 |

*Supplemental List.*

SPECIMENS OF STONES, PROCURED BY THE NELLORE LOCAL COMMITTEE.

| | No. |
|---|---|
| Gneis impregnated with Garnets from Sydapoor sent by Mr. Elton. | 1 |
| Stones from the neighbourhood of Rapoor in the Nellore Zillah, sent by the same Gentleman. | 3 |
| Stones from near the Narasimhalu Hills sent by Mr. Crozier. | 2 |

CLOTHS.

Forwarded by Pitchica Ramalingum Chetty, weaver, exhibitor.

To be returned if not disposed of for the prices fixed.

| | | | | | | Rs. | As. | P. |
|---|---|---|---|---|---|---|---|---|
| 1 | Piece of Rajabadar cloth | 17 | yards long. | | | 26 | 0 | 0 |
| 1 | Do. Do. | 18 | Do. | | | 26 | 0 | 0 |
| 3 | Pieces of Do. | 18 | Do. | at 22 Rs. | each | 66 | 0 | 0 |
| 1 | Piece of Isaree cloth | 14 | Do. | | | 21 | 0 | 0 |
| 1 | Do. | 14 | Do. | | | 20 | 0 | 0 |
| 2 | Pieces of Do. | 14 | Do. | at 19 | Do. | 38 | 0 | 0 |
| 2 | Do. Do. | 14 | Do. | at 18 | Do. | 36 | 0 | 0 |
| 4 | Do. Do. | 14 | Do. | at 17 | Do. | 68 | 0 | 0 |
| 2 | Do. Do. | 14 | Do. | at 14 | Do. | 28 | 0 | 1 |
| 3 | Do. Do. | 14 | Do. | at 11 | Do. | 33 | 0 | 0 |
| 2 | Do. Do. | 14 | Do. | at 9 | Do. | 18 | 0 | 0 |
| 4 | Do. Do. | 14 | Do. | at 8 | Do. | 32 | 0 | 0 |
| 4 | Do. Jean | 14 | Do. | at 10 | Do. | 40 | 0 | 0 |
| 4 | Dozs of Handkerchieves | at Rs. | 3 12 0 | per | Doz. | 15 | 0 | 0 |
| 55 | Do. Do. | at Rs. | 4 0 0 | | Do. | 220 | 0 | 0 |
| 44 | Do. Do. | at Rs. | 3 0 0 | | Do. | 132 | 0 | 6 |
| | | | | | | 819 | 0 | 0 |

Mr. McIvor Superintendent Government Gardens, Exhibitor.

FIBRES.

8264 Nar or bast from a species of Sterculia.
8265 Nar or bast from the large Australian or rather Cape. tree.
8266 Nar from Pimelia a Cooramboore sack from Wynaad Jungles.
8267 A soft Stone common in Wynaad.
8268 French Beans,
" Woods.
8269 Sarcococca trinerva or Neilgherry Box Wood.
8270 Dodonea viscosa.
8271 Sapota Elengoides.
8272 Iny Marum.
8273 Nou—or Nagoo Marum.
8274 Poona Marum.
8275 Ven Marathoo.
8276 Ben Teak.
8277 Grewia tilaefolia Thalamarum.
8278 Kotum Vaga Erythrina Indica.
8279 Porlee Marum.
8280 Vanghy Marum.
8281 Odageo Marum
8282 Kana Kytha.
8283 Pedoo Marum.
8284 Carroo Marrathoo.
8285 Kunjeeram Marum or Poison tree.
8286 Thalay Marathoi.
8287 Pathree Marum.
8288 Jack wood.
8289 Karroo Vagoo.
8290 Kul Teak.
8291 Thany Marum.
8292 Saggapoo do.
8293 Srool do.
8294 Jumbagum do.
8295 Netavil do.
8296 Beaty orCarrooo do.
8297 English Barley.

D. Ross, Esq. Exhibitor.

8298 Silk from Assam.
8299 Aniah Monga.
8300 Tasseli.

## LIST OF ARTICLES FORWARDED TO THE MADRAS EXHIBITION BY MR. W. G. McIVOR SUPT. GOVT. GARDENS OOTACAMUND.

Nar or bast from a species of Sterculia the tree is common in Wynaad on the higher elevations. The bast is as durable as ordinary Russian bast but inferior to the best Russian bast.

Nar or bast from the large Australian or rather Cape tree (Acacia robusta) so common on the Neilgherries. In January last I first used this bast and it has since been in use in these gardens for all the purposes to which Russian bast is applied in gardens in Europe. The material is strong very tough and durable also pliable when welted. No. 1 specimen is the bark as taken off the tree. No. 2 is prepared for tying plants. No. 3 for twisting into rope. This bast could be procured cheaply and in large quantities, as the trees when cut down throw up numerous young shoots to the height of from 6 to 12 feet in one year. The bark of this tree is also a powerful tan.

Nar from Pimelia—the specimen is from Wynaad where the plant is abundant and there made into sewing thread by the Natives. The plant is also common all over the Neilgherries.

A Cooramboors sack from Wynaad jungles. This curious bag is simply the bark beat and then pulled off a large and common jungle tree Lepurandra saccadora. When a Cooramboor wishes a sack to carry his rice he cuts down a branch of the "chundul" and then cuts it into the length of the bag required—this being done he proceeds to beat the bark all round on the outside until the reticulated fibres of the inner bark begin to give way. He then draws the bark off entire, rubs off the outer bark sows the inner bark up at the bottom (with thread made of the Pimelia) which completes the operation.

The tree is very common and of gigantic size the wood is said to be good and the

fibre which is strong and could be procured in any quantity and at a cheap rate may prove of some commercial value.

A soft stone common in Wynaad occuring in immense beds between sultans Battery and Wulputty (probably common all over the country) it is easily cut and ornamented and on that account cut into figures by the natives and used for building their temples. They say it is imperishable and resists damp and becomes harder the longer it is exposed to the Weather.

French Beans from the Government Gardens Ootacamund. It is well known that the French Beans forms the principal food of the French peasant and soldier. These beans contain more nutritive matter than any other known Vegetable Product and are on that account most desirable for the supply of troops. In France they are sold from 2½d to 5d ℔ lb. according to colour the white kinds bringing the highest price. They could be produced on the Neilgherries if grown in large quantities at about half the above mentioned price and are exhibited in order to call attention to this fact.

Bundles of Porcupines Quills.

## WOODS.

Sarcococca trinerva or Neilgherry Box Wood. Tree very common on the Neilgherries wood hard and durable, might be used as common Box wood in the Arts.

Berberis tinctoria a common shrub on the Neilgherries wood is said to yield a yellow dye and might be used for purposes.

Dodonea viscosa common on the Neilgherries wood elastic and useful for tool handles.

Sapota Elengoides a large common onthe Neilgherries wood strong and elastic and like the Hawthorn burns well when green.

Inymarum Artocarpus hirsutus used about Calicut for making furniture and for building purposes common on the Western Ghauts and in Wynaad. A large tree.

Nou or Nagoo Marum. Pterocarpus species a very strong and durable wood common on the lower elevations of the Neilgherries an ordinary sized tree.

Poona Marum Calophyllum species a large tree common on the Western Ghauts wood much used in House and to some extent in ship building.

Ven Marathoo Terminalia sp: common about Nelambore tree of large size wood used in building.

Ben teak. Lagerstræmia microcarpa common in Wynaad and on the Western Ghauts wood prized for making coffee cases.

Grewia tilæfolia Thalathee Marum wood used as the Ben teak for which it is often sold at Calicut.

Kotum Vaga Erythrina Indica used for floats by the Fishermen not durable.

Poolee Marum Salmalia Malabarica common about Nelambore where it is used for building.

Vanghy Marum Pterocarpus marsupium common all round the foot of the Ghauts wood much used in building but exudes a yellow dye which discolours the chunam where it comes in contact with it.

## OOTACAMUND.

Odagoo Marum Bassia longifolia an ordinary sized tree wood much used on the Malabar side for building.

Kanakytha Artocarpus echinata not used apparently a good wood a large tree very common about Walaghat and Wynaad.

Peedoo Marum a small tree wood used for building in Wynaad where it grows plentifully.

Carroo-Marrathoo Terminalia elata, used for the same purposes as Ben teak under which name it is frequently sold, common on the Western Ghauts and in Wynaad wood not durable.

Kunjeeram Marum or Poison tree Strychnos Nux-Vomica a small tree very common about Nelambore wood strong and elastic much used for tool handles.

Thaly Marathoo Sapindus emarginatus a small tree wood elastic strong and durable common in Wynaad.

Pathree Marum Stereospermum sp : a large tree, wood used for building and making cases common in Wynaad.

Jackwood Artocarpus integrifobia, common all over India used for making furniture.

Karroo Vagoo Pterocarpus sp : a very common tree on the Western Ghauts wood strong, durable, and much used for building.

Kul Teak Tectona grandis var. Wynaad about Sultans Battery but scarce considered superior to the common Teak.

Thany Marum common about Nelambore and in Coorg wood much used but not durable being very liable to be attacked by insects.

Saggapoo Marum or Cedar Wood Hymenodicton excel-sum a large tree common all round the foot of the Neilgherries, wood much used and esteeemed for inside work such as drawers &c.

Irool Marum Mesua sp : Nelambore Jungles common much used by the Natives for building purposes durable and not liable to be attacked by insects.

Jumbagum Marum Pterocarpus sp : common about Nelambore and in Wynaad a large tree wood used for building ; and fencing gardens said to be durable.

Netavil Marum or Chundul Lepurandra saccadora. This is a very common tree and the most gigantic of all the trees in the Wynaad Jungles Cooramboor bags or sacks are made from the bark wood not much used.

Beaty or Carroo Marum. Blackwood Dalbergia latifolia common in Wynaad on open and grass lands where the tree attains a great size.

English Barley grown on the Neilgherries.

Weaver Nanooviah, Exhibitor.

TABLE CLOTHS TOWELS AND NAPKINS.

191 Mayilkum Table Cloth Rs. 2-8
192 Pully do do. Rs. 3.
193 Dimity do do. Rs. 2-4.
194 Bed Cloths Rs. 2 4.
195 Doz. Towels at 2 × 1½ cubit Rs. 2.
196 Doz. Ditto at 2 × 2 do. Rs. 2-8.
197 1st Sort Pully Napkin As. 1-8.
198 2nd. do do do As. 1-4.
199 3rd do do do As. 1.
200 1st do Mayilkum do As. 1-8.
201 1st do Dimity do As. 1-4

---

Nellicherry Sevarama Iyer, Exhibitor.

MATS.

202 Valia Veerally Rs. 6
203 Pully ditto Rs. 4.
204 Nalloochayem ditto Rs. 4.
205 Nadooka Vella Rs. 3-8.
206 Annypoo Veerally Rs. 3-8.
207 Red Coach do. Rs. 3.
208 Black ditto ditto Rs. 2-8.
209 Ditto ditto Paguda Rs. 2-8.
210 Ditto ditto Anny Rs. 2-8
211 Ditto do Chadracally Rs. 2-8.
212 Sooriacandem Rs. 2-4.
213 Nalloochayem ketty Mookiya Veerally Rs. 2-4.
214 Natchathram coach Rs. 2.
215 Mayilkum Rs. 1-12.
216 Inferior kind Rs. 1-8.
217 Naroongarry Rs. 1-8.
218 Kettimookiya Rs. 1-3.
219 Nulloochayem Veerally Rs. 1.
220 Common Rs. 1.
221 Annipoo As. 10.
222 Pagadapoa As. 10.
223 Paramathany Coach Rs. 6.
224 Mahapoo Rs. 6.
225 Kattymookiah Rs. 6.
226 Nadoovella Rs. 4-8.
227 Poolikooroona Rs. 3-8.
228 Nadooka Vella Veerally Rs. 8.

PADDY.

229 Valia Chamban.
230 Small do.
231 Anna ditto.
232 Yeripapoo ditto.
233 Large Choranally.
234 Small ditto.
235 Red ditto.
236 Ottathunden do.
237 Choranally.
238 Karootta Kayama.
239 White ditto.
240 Kooroova ditto.
241 Karootta Karoopally.
242 White ditto.
243 Maja ditto.
244 Black Navaro
245 White ditto
246 Paramba Moden
247 Katta ditto
248 Ary ditto
249 Arien ditto
250 Patta ditto
251 Velootta Vutten
252 Thonooram ditto
253 White Moondagapully
254 Tharoopully
255 Kada kalooten
256 Thavala kunnen
257 Karoothany
258 Karoothpanaryen
259 Ragannen
260 Aroovakarry
261 Koongama chumber
262 White Areecy
263 Black ditto
264 Chengooroova
265 Earkella Chumben
266 Pedooparien
267 Cherooponarien
268 Seera
269 Bengal Chumben
270 Seeraga ditto.
271 Small ditto.

---

Kristna Chettiar, Exhibitor.

WOODS.

272 Chorigoorom
273 Teak wood.
274 Pullamarda
275 Karoovalagam
276 Vendaka
277 Arasa.
278 Valagom
279 Peroontholy
280 Peeroova
281 Mayilella
282 Aroomboolly
283 Annacara
284 Panganny
285 Goa
286 Maravetty.
287 Korangapingee
288 Mambalanary.
289 Eanga
290 Nochy
291 Thany

292 Parooka
293 Paragoom
294 Yeloopa
295 Marknut
296 Koomoola
297 Kangerom
298 Mangaka dumbah
299 Alla Banien
300 Mango
301 Malamantharom
302 Chomaren
303 Palkur
304 Kullala
305 Narachy
306 Yelanda
307 Vapa do
308 Malangare
309 Kappunjaree
310 Porasa
311 Modalamookindo
312 Chendoorem
313 Theovetty
314 Adookoopangany
315 Tharapaula
316 Eroovool
317 Malookoby Vaga
318 Oondanally
319 Omethaka
320 Kanagom
321 Karavanmarda
322 Kodagapala
323 Karingalby
324 Plara Jack wood.
325 Malavamboo
326 Wood apple valla.
327 Black Wood (Beitly.)
328 Ayerpooby wood
329 Narryvillava
330 Chorecoby
331 Pathery wood
332 Nanjapaveta
333 Arynelly
334 Kadooka
335 Vuttapalany
336 Pelachy
337 Itty
338 Konna
339 Karella
340 Carpenjee
341 Peechy
342 Vilvum
343 Avil
344 Neelapolla
345 Pokavalla
346 Kannoothinny
347 Patucheeny
348 Veduttalla
349 Neermarda
350 Koomblapadry
351 Odooya
352 Vanga
353 Karoovapa wood.
354 Edingell
355 Vedipavetta
356 Navel
357 Kingedimanthoram
358 Poolla
359 Atty
360 Neerpoolava
361 Ayngolom
362 Kadamba
363 Karoomarda
364 Poovarasa
365 Poona
366 Tamarind
367 Paramba
368 Thoombil
369 Paya
370 Kangeekota
371 Kayany
372 Poovem
373 Vedengorana
374 Vellanava

---

## Veerasawmy Moodelly, Exhibitor.

### Coloured Leather.

375 White leather of Sheeps As. 8.
376 Deer Skin do As. 8.
377 Red leather of Sheeps As. 12.
378 Pale colour of Deer Skin Rs. 1.
379 do do of Sheeps As. 12.
380 do do of Goat Rs. 1.
381 Leather of do As. 5.
382 Blue colour of do As. 12.
383 Purple colour of do Rs. 1.

---

## Armooga Konar Exhibitor.

### Oils.

384 WildSerpent Oil.
385 Peacock do
386 Pigs ghee do
387 Neeratty do
388 Wood do
389 Marknut do
390 Earth do
391 Castor do (ordinary)
392 Cashew nut do
393 Marikoloondoo do
394 Gingely do
395 Cocoanut do
396 Cloves do
397 Fire Ointment (draragum)
398 Indian laurel tree oil.
399 Eggs oil. do
400 Camphor. do
401 Bears Ghee do
402 Mustard do
403 Jungle Castor do
404 Kodapalary.

405 Wild Olive tree
406 Poonga do
407 Pocvotta do
408 Maravettee do
409 Margosa do
410 Garlick do
411 Koriander seed do
412 Yeliamanaka do
413 Peppers do
414 Castor (Hospital)
415 Cinnamon do
416 Kaskus do
417 Koongliam do
418 Galnut seed (kadookoy)
419 Cummin seed.
420 Sandal do
421 Bitter almond do
422 Bendacoy do
423 Sundnathy do
424 Narevallem do
425 Sheeps ghee do
426 Chilly Ointment.
427 Black gingelly Oil.
428 Harts ghee
429 Seenikoy Oil.
430 Karoovoy puttay.
431 Peroonjeeragum.
432 Tigers ghee.
433 Neringee mooloo Oil.
434 Magarasango Ointment.
435 Ornem.
436 Benjamin.
437 Brimathandy.
438 Ihavatbarom.
439 Frogs Ghee.
440 Koondrookom.
441 Seeroopunary.
442 Agatty.
443 Saltpetre.
444 Sulphur sour.
445 Canjerakooroo Oil.
446 Wild Hogs Ghee.
447 Harkolary Ointment.
448 Horiey.
449 Jooty Oil.
450 Abeen (opium)
451 Masakadooga.
452 Jinet catechue Oil.

---

Kristna Chettyar, Exhibitor.

IRONS.

453 Padinjarrapurom.
454 Angadypurom.
455 Jharoor.

Lutchmansing Exhibitor.

GUMS.

456 Opium.
457 Toobacco.
458 Tamarind.
459 Coondoomony.
460 Vooloondoo.
461 Wheat.
462 Kumbly.
463 Mattipaul.
464 Mooroonga.
465 Wood Apple.
466 Hing.
467 Margosa.
468 Kareengoongliem.
469 Googne.
470 Rooma Mustkee.
471 Koondrookom.
472 Vellakoongley.
473 Karoovalom.
474 Salamisree roots.
475 Vendaya gum.
476 Coova mavoo.
477 Glue.
478 Chundress
479 Annakara
480 Karoovaga
481 Vellakava
482 Vellanavel
483 Venga.
484 Arsa
485 Atty
486 Jackwood

---

D. Parker Esq., Exhibitor.

SUNDRIES.

2330 A Timber Bridge of three Truses on the American principle 1 Inch to 1 Foot.

2331 Mining Tools.

2332 A model of a "Dobbing Cart" used on the earth work of the Madras Railway.

Mr. H. H. Smith Superintendent Madras Railway Company; Exhibitor.

2333 Style of a tempered steel inlaid with Silver.

D. Parker Esq, Exhibitor.

2334 A model of a scotch cart used on the Madras Railway for a Pair of Bullocks.

Dr. Braudies Supt. of Forests in Pegue Exhibitor.

METALS.

8901 Khabeeah a compound of Tin and Lead from Ava.
8902 Khaimaphjoo Lead from Ava.
8903 Than Burmese iron.
8904 Burmese Bismuth.
8905 Thoot Burmese Zinc.
8906 Paddah Burmese mercury from Ava.
8907 Henthabadahacing Crystalized Cinnabar.

VERMILLION.

8908 Henthabadahajing Vermillion powder.

MINERALS.

8909 Kan Burmese Sulphur.
8910 Miaithingay clay with much Iron Eaton by Burmese ladies.
8911 Tsay-dan Oripigment (Deuto sulfuret of Arsenik) yellow paint.
8912 Kangoo san Soapstone (Silicate of Magnesia) Burmese pencils.
8913 Kjoukpjen Sandstone Stone on which the powder used by the Burmese Ladies is mixed with water.
8914 Zan Zing saltpetre.
8915 Yenan Earth oil from Yenangjoung below Ava.

ROOTS OR PARTS OF THE SUBTERRANEAN STEM.

8916 Ginseing Ginger Zingiber sp. Rangoon.
8917 Nhanoing Turmeric Curcuma sp. Rangoon yellow dye.
8918 Khamoung on Kaempferia Galanga Used as spice, and as powder by the Kareen ladies.
8919 Kambaloo Umbellifera? Used by the Burmese ladies as a powder for the face.
8920 Thayinkadoe Croton sp: medicine.

PART OF THE STEM WOOD AND BARK.

8921 Tsaijau. The stem of Tobacco Necotiana Tabacum cut into pieces, is mixed with the Tobacco leaves for making cheroots.
8922 Thajan Grewia sp. used for washing the hair.
8923 Katheetsoo Toddalia sp. Medicine and used by the Burmsse Ladies as powder for the face.
8924 Thaijingipee Croton sp: Medicine.
8925 Teingjet Caesalpinia sappan red dye

LEAVES AND FLOWERS.

8926 Majahbun leaves used to cover Cheroots.
8927 Sepay Chou. Burmese Tea.

FIVE VARIETIES OF NYMPHAEA SP: USED AS MEDICINE AND AS A DAINTY.

8928 (a) Kya byou white flowers and buds.
(b) Kja pounay eh white and Black buds.
(c) Kija nyo (blue) buds.
(d) Kija nee (red) buds.
(e) Kija tesay (yellow) buds.

FRUITS AND SEEDS.

8929 Nagoukgjailay Capsicum annuum.
8930 Nhannay black Sesam sesamum indicum oil.
8931 Nhanpjoo white Sesam oil.
8932 Peinzaing zee Ocimum sanctum steeped in water and drank as a Sherbert.
8933 Kounthee Betel nuts Areca Catechu from Goungoo.
8934 Malajou Kounthee Betel nuts inferior kind from Moulmein.
8935 Samoung nay Nigella sativa Eaten with Sweetmeats.
8936 Peikcheen Long Pepper piper longum used as Medicine.
8937 Kijazee Melumbium peciosum eaten by the Burmese.
8938 Myai bay Ground nuts Arachis hypogaea Eaten Rangoon.
8939 Thee dinsee Arnotto, bixa Orellana cultivated in Pegu red dye.
8940 Kjaithee Ink nuts semecarpus Anacardium used as medicine and to mark cloths.
8941 Keen boon the Acacia rugata green dye.
8942 Touey gee Adenanathera pavonina and as weights.
8943 Zeng yone nee Abrus precatorius Medicine.
8944 Zeng yone beeou Abrus white Medicine.
8945 Kalyng Guilandma bonduc Medicine.
8946 Kyey Zee Coix Lacrima Neck-lace and Ornaments.
8947 Pangah Terminalia bellerica Eaten

8948 Kanakau Croton Tiglium ? Medicine
8949 Gaungin Enthada Tusaetha Eaten

EATEN WHEN ROASTED.

8950 Kjaisson Terminalia Chebula Eaten
8951 Hzee Nizyphus Jujuba Eaten.

OIL RESIN, GUM, BALSAM ETC. ETC.

8952 Shaw Mhyoo Nhee Catechu accacia 1st Quality, Eaten with beetle nut
8953 Shaw Myou Nhait do 2nd Quality Eaten and for marking.
8954 Shaw Ysai Do. 3rd Quality Eaten.
8955 Thessee Lacquer Melanorrhoea usitatissima used for the Burmese boxes.
8956 Khjeijk Mhau sticklac powdered, and used as glue by turners.
8957 Khjeyk Stick lac produced by the puncture of a sp. of coccus not only on the branches of Ficus sp : but also on those of Zizyphus Jujuba.
8958 Kanyin zee (from the Rangoon bazaar Diptero carpus alatus.
8959 Kanyin Zee (Diptero carpus alatus) Wood oil direct from the tree.
8960 Aing Zee Wood oil of Diptero carpus sp.
8961 Aing thee seeds of Ditto.
8962 Aing dooey Resin of the Aing bain depteeo carpus species See 106.
8963 Pooey Nyet Resin found in hollow trees of different kinds Pyrkadoe Ingu Xylocarpu, Pymmah Lagers troimia sp. Aing diptero carpus sp : through the puncture of an Insect.
8964 Kanyin Midein Torches filled with rotten wood saturated with the oil of Deptero carpus alatus, and enclosed with leaves of Thaban bain (Pandan us sp :)
8965 Shan Zee Oil of an unknown plant from the shan country used for lacquering.

MANUFACTURES.

LACQUERED WARE.

8966 Dounglan The universal table and dish in one of Burmah, used by the King, Pungyis, and beggars. The principal seat of this manufacture in British Pegu is Prome, where the Tyke Okes, or manufactures of these articles occupy an entire street by themselves.
The Dounghan consists of three parts which are made separately, the basis, the top and the pantein, or sticks which join both together. All are turned on a lathe, being fastened to it by stick lac (kjeik.)
When the piece are joined together, they are first covered with a layer of Thetsee Melanonhoca vanish then with a mixture of Thetsee and Wood ashes, then with Theetsee alone, until the surface is perfectly smooth, and at last with a mixture of Theetsee, binnabar and shausee, which gives them the red colour.
8967 One ditto in the second stage covered with Theetsee alone.
8968 Two Biahs, finished, one with more, the other with less binnabar.
8969 ThoungZoundan biah dish for presenting offerings. The upper part of this article is not made of wood, but of a net-work of bamboo, like all articles enumerated in the following and all boxes known as shan boxes.
The lacquering of the bamboo articles is done in the same manner as that of the Dounglans. The best of the article of this kind are used to be made by burmans at Pogan, in the Burmese territory below ava.
8970 Koung ou Burmese betel box.
8971 Koung ou kings beteb box.
8972 Small betel box.
8973 Ditto ditto.
8974 Ditto ditto.
8975 Shan betel box.
8976 Kallat used for presenting sweet meats to Poongyees.
8977 Burmese cup.
8978 Oh Zee Burmese drum.

MATS, &C.

8979 Theinbew aphju. White mats Maranta sp : Thein been.
8980 Do anay black mats.
8981 Hnee phia bamboo mat.
8982 Kathoriuwa. bambrisa sp :
8983 Zyaitpheea made of Zeyaitbein Marantocca ? Rangoon.
8984 Thabau phea made of Thabau bein Pandanus sp : Rangoon.
8985 Kyoo Koubine Reed mat made of Kyoo bain Arundo sp :
8986 The stems of Kyoobain Arundo sp :
8987 Phah Burmese basket made of Thanbain the palm leaf borassus flabelliformis.
8988 Tabiaih Zee burmese broom made

of the cocoanut leaves stalk 3 specimens.

8989 Khamaoo Burmese coolies hat made of the sheaths of the large bamboo. Wah bain bambusa gigantia ?
(a) 1 of size.
(b) 2 of do.
(c) 3 of do.

8990 Paiajouet Burmese blank book made of the leaves of Cory pha sp

8991 Paiza Burmese sacred writings.

ARTICLES OF METAL.

8992 Burmese Dah.
8993 Shan Dah.
8994 Burmese scales Burmese weights 20 Gikals, 5 do 2 do, 1 do. ½ do, ¼ do.
8995 Burmese betel nut scissors.
8996 Burmese spoon and Tweezers.
8997 Burmese Castanets or Cymbols.

VARIOUS.

8998 Sapeeyah Burmese soap.
8999 Burmese looking glass.
9000 Do do
9001 Burmese Combs.
9002 Burmese Cotton
9003 Burmese cotton thread
9004 Burmese paper made from the bark of the My oung bain Ficus sp. Mhin wa. Bambusa sp : and other trees.
9005 Shan paper made from the bark of the same tree in the shan country.
9006 Phanna seng Burmese slives.
9007 Do do.
9008 Phanna seng worn by Burmese Coolies.
9009 Po. jeoo spun silk from Pegue.
9910 Umbrella from Ava. The shaft made of Wapjoo a kind of bamboo not to be found in the lower parts of Pegue.
9011 Umbrella from Rangoon. The shaft of Thein wa Bambusa sp.

BURMESE SILKS AND KAREEN COTTON DRESS DYES USED FOR THE DIFFERENT COLOURS.

9012 one Black May bain Indigopera sp fresh prepared for use.
9013 two Crimson. Theydensee Bixa Orellana See No. 45.
9014 three Yellow Nhaniouin Curcuma longa See No. 18.
9015 four Green 1 Keenboon thee Acacia See No. 47 rugata fruit and leaves.
2) Pangah bain Terminalia belleri fruit and leaves See No. 53.
9016 five Dark red Teingjet basapinia Sappan See No. 27.
9017 six Brownish red. Neebah, bain (onkareen cotton)

BURMESE DRESSES.

9018 Patsau Gentlemens dress made of Burmese silk

Ladies DRESS.

9019 Tsat. Tamain
9020 Loun Tamain.
9021 Tamein Na.

KAREEN DRESSES MADE OF KAREEN COTTON.

9022 Theing dein, ornamented with the seeds of kyei see box sp : of which several varieties are cultivated See No. 52.
9023 Kaum baun Turban or Head dress.
9024 Tamein or Petticoat
9025 Akureen Ladies necklace of box seeds
9026 Head dress of betel winge.
9027 Nadaun silver Ear rings.

## COMMITTEE OF EXHIBITIONS
### FOR THE FRENCH ESTABLISHMENTS IN INDIA.

MM. A. Gallois-Montbrun, Esq., Chef du service des contributions, President.
De Nozelle, Esq., Pharmacien de la Marine, Secretary.
E. Lippman, Sous-Chef du service des Contributions.
De Querret, Sub-Engineer,
succeeded by
Carriol, Conducteur des ponts et Chaussées de 1re classe.
Lepine, Pharmacien de la Marine.
L. Aroquiassamy-Modeliar, Négociant
actingly succeeded by
Soupourayapoulle, Directeur de la ferme de l'Arrack.
Gnanapregassanaik, Naïnard.

## COMMISSIONER OF THE FRENCH GOVERNMENT TO THE MADRAS EXHIBITION.

A. Gallois-Montbrun.

# NOMENCLATURE OF ARTICLES

SENT BY THE

**French Establishments in India**

TO THE

# MADRAS EXHIBITION

OF

# 1857.

The only French Establishments which have been represented in the Madras Exhibition, are those of Pondicherry and Karikal.

The Committee regrets not having been able, notwithstanding their efforts, to make a collection of articles, offering a more complete idea of the productions and resources of the country generally, more particularly of Karikal.

Many causes have contributed to this unsatisfactory result. First the Exhibition of 1857, has perhaps followed too near on that of 1855. Since in India, owing to the slow propagation of new ideas, and the difficulty there is in making any thing public. The objects sought to be obtained by Exhibitors, has yet to be learnt and appreciated. Those who as Members of the Local Committee's have experienced these difficulties, can alone have a very exact idea of the impediment attending a contingent collection of articles destined for an Exhibition. With a few exceptions, the producer in India, particularly the native, can with difficulty be made to consent to make public his products, or the means by which excellence in their growth of manufacture has been attained. While the European has no immediate dread of competition, and the attendant difficulties. The Hindoo, even supposing his understanding to have been enlarged, has still some secular prejudices to surmount. The following circumstance will shew to all, the degree of prejudice which is opposed to the establishment of Exhibition in this country. The Local Committee of Pondicherry having wished to send to Madras a collection of tissues manufactured in the French territory, re-

ferred the matter to the principal Weavers of the places adjacent to the town of Pondicherry, and offered to buy their collections, paying them the price *immediately* after the closing of the Exhibition *where each produce would be exhibited with the manufacturer's name attached.* After long hesitations and negociations which lasted many months, the Weavers refused and declared positively that their names should not be published in the catalogue of the Exhibition. The Committee then abandoned the idea. Happily they found in Mr. Kou Parasoorama Chettiar, Native Banker, whose intelligence has raised him to his present affluence—a coadjutor, whose exertions and contributions released them from further trouble and anxiety on the subject. The same praise is due to MM. Soupourayapoullé —Soubrayapoullé and Poullé Appavoo Moodelliar. The Committee hope that this explanation of matters will be their excuse with the General Committee and the Govt. of Madras whose generous efforts have now been continued for 2 years, for the small consignments from the French possessions in India and will also induce them to increase the rewards to those exhibitors who have responded to the wishes of his excellency the Governor of Madras, almost all the following articles were contributed by Pondicherry Karikal and were manufactured in their neighbourhood. The small number that the Committee purchased in the Bazaar, will form the subject for a special report.

The agricultural and industrial resources of the two Establishments which were denominated above shall be mentioned in a summary manner, under the head of each class to which they belong. The particular observations on each product shall be put immediately after the article referred to. The only general observation that the Committee think it is necessary should precede this List, is relative to the fairs or places where procurable and upon which the general Committee desired to have special information.

There is no fair either at Pondicherry or at Karikal. The bazaars or markets of these two towns serve only for the exchange or sale of provisions necessary for home consumption. The following fairs, although not in French territory, may justly from their proximity be considered as influencing the commerce of Pondicherry and its establishment.

(1) Marcanum (District of Tindivenum) Wednesday of every week. Thick cloths, various merchandises, rice and other grains, legumes, salt fishes, &c. This market was established three years ago, and attracts many merchants and is becoming of increased importance every day.

Tindivanum (District of this name) Wednesday of every week. Natchiny, Cholem, Rice, Cloths, earthen pots, cocoanuts, fruits, jack, and pulses. This market recently established, already begins to increase.

Manaloorpett (District of Tiroocoviloor) Monday of every week. The same merchandises as at Tindivanum ; it is not so well attended as when first established about 12 years ago.

Tiroocoviloor (District of this name) Paddy, Salt Natchiny, Cholem, Cumboo, Paroopoo, Rice, Cocoanut, Jaggry, Betle, Groundnut, Tamarind, Garlic, Dates, Gingely Oil, Sugar, Palm-tree's Sugar, Black Gram, Bananey, Jack, Pulses, Ghee, Pepper, &c., and other merchandise, 15 Butchers stalls. This market, established on the 7th January, 1854, takes place twice every month on Wednesdays.

Poodoopaleom (District of Siroovunnamalay) twice a month, Thursdays. The same ar-

ticles as in the two markets above named. Though this market has been established many years, it has not increased.*

## CLASS I.

### Mining, Quarrying, Metallurgical Operations and Mineral Products.

The Committee have not any kind of mineral products of the establishment of Karikal and that of Pondicherry,as yet explored but little,with the exception of the Iron Ores,&c,calcareous rocks of Seedrapett exhibited at the last Exhibition—affords nothing new. The recent excavations have led to the discovery by Mr. Perrottet, of lignites which this experienced botanist had been pleased to send to the Exhibition.

### SECTION I.

#### Combustible or Inflammable Minerals.

1. Lignites of Diralyledones

M. Perrottet, Esq., Agricultural Botanist at Pondicherry, Exhibitor.

" Found at the Horticultural establishment of Pondicherry, at the depth of forty feet. (Note of the Exhibitor.)

2. Lignites of Monocotyledones, cocos nucifera vel Borassus flabelliformis.

3. Lignites of fern trees, fibres arborescentes.

" These monocotyledone lignites were found in the Horticultural establishment at Pondicherry, at almost thirty feet depth. Samples of the same nature were previously discovered near the Government House, at a depth of sixty feet. Also in other parts of Pondicherry, which leads to the impression with some appearance of reason that this town and its neighbourhood is situated on what was once forest land."

### SECTION II.

#### Lithoid Minerals.

4. Meteorites or Aerolites.

" Detached fragment of a block weighing twenty pounds, which was found lying by another weighing thirty five pounds. These two pieces seem to have been united,it is impossible to determine accurately the date of their fall. We can affirm that there was nothing of this kind before 1819, in the place where they have been discovered, it must have bad after that season that they were deposited there. This stone exhibits all the qualities of true meteorites, especially of those which fell at Benares, and perhaps of those at Chassigny near Lange, in 1815. It is well known that these aerial bodies resemble each other in their mineralogic and chemical nature."

---

* Tiroovannamalay (District of this name) Monday of every week. Oil seeds for lamp, jagry, natchiny, black gram, green gram, rice, wheat, cloths, &c. This market, established in October 1814, seems to take a new extension every day.

Colianoor (District of Vijoopooram) Friday of every week. The same articles as in the market of Tiroovannamalay.

Tadapooram (same District) Monday of every week. Baskets and same articles as in the two markets above named.

Chettpet (District of this name) four times per month,Sundaycloths,iron utensils,&c.; established in 1848.

Araloorpett (same District) twice per month, Wednesday, several articles,established in 1849.

Ginji (same District) twice per month, established nearly four years ago.

(Note of the Exhibitor.)

5i. Petrified wood.

" Found in the Horticultural establishment of Pondicherry." Local Committee Exhibitors.

5 bis. Calcareous rock of Seedrapett, variety of Trichinopoly marble.

This rock is in abundance at the village of Seedrapett, situated at eight miles N. W. off Pondicherry, Terivicarny English territory, where they find the famous petrifications of this name.

## CLASS II.

Local Committee, Exhibitors.

### Chemical and Pharmaceutical Processes, Medicines, Vegetable and Animal.

6. Anethum Graveolens in Tamil Sada Kuppy.

" Purchased in the market of Pondicherry."

Poulli Appavoo Moodelliar, Exhibitor.

7. Physalis flexuosa, in Tamil Amukkanaankelungu. Price two annas half kilo.

Dr. A. Collas, Superintending Surgeon, Chief Surgeon to the Medical Establishment in India, Exhibitor.

8 & 9. Milabris Pustulatœ and Punctum, sold in the Government Dispensary at Pondicherry, for one Rupee one Anna four Pice, half kilo.

"These Blistering insects which were introduced in the French therapeutics by Dr. Collas, are favorably known by three reports of this honorable Physician, inserted in the Colonial Reviews of February 1856, February and August 1854, and by the 2d class medal which has been given him in the Madras Exhibition of 1855. They do not use other blistering substances in the Pondicherry Government Dispensary.

10. Shark liver oil, prepared at the Government Dispensary of Pondicherry.

" The shark liver oil can, in case of necessity, supercede that of cod fish which medicine cannot be dispensed with, speaking of its use in chirurgical cases.' This is the process followed in to preparing the shark liver oil. It is similar to that employed in India in the Honorable Company's territory."

" After having washed the liver with care, and rejected the gall, bladder, they cut it in pieces and boil it in a great earthen vessel for about 1 hour. The fire must not be too quick it must be constantly stirred with a wooden spatula When the oil floats on the water it is skimmed. The residue left to settle in an open vessel for two days and then again boiled and the oil taken of the surface, this latter then undergoes filtration to clear it from impurities.

" A cauldron and a wash pail are all that is required for this preparation.

" Freshly prepared, the shark liver oil has a pretty amber colour, which I have seen ad-

vantageously compared to that of old brandy. Under a temperature of 30°, it is perfectly clear. Its smell and taste are almost the same as the cod liver oil. Sulphuric acid poured on the shark liver oil produces discoloration, similar to that which ensues on mixture with the cod fish's oil.

The most transparent shark liver oil leaves even after many filtrations a considerable quantity of thick slighty grumous white matter It is separated by the means of a single filtration. It is evidently sterine. I have given to it the name of *squalin* to distinguish it from the Commercial sterine ; extracted from the liver oil after two or three filtrations, it is a thick, and fluent mass, which retains a certain quantity of oil. I do not hesitate to say that the squalin is an important acquisition for hot countries, and probably will be found useful in our arsenals.

" The shark liver oil is administered in all organic affections whose apparent symptoms are debility, when there is nothing wrong with the digestive organs.

" The shark liver oil has been carefully tried in the treatment of leprosy and although it has not succeeded in curing this almost incurable disease yet it appears from a " report of the Madras Medical Board on a trial of the Hydrocotyle Asiatica" that the shark liver oil has affected a considerable improvement in the condition of the lepers.

" *Chirurgical uses of the shark liver oil.* I have tried the pure shark liver oil for the treatment of wounds and ulcers very difficult to cure, and to which the inhabitants of hot countries are subject, especially those who live in unhealthy places where ulceration of skin is one of the indications or consequences of miasmatic poisoning. I do not hesitate to declare that for the treatment of bad ulcers, there is no remedy equal to squalin. In using the squalin, it is sufficient to spread it with a feather on the lint. As to the oil, pledgets of tow or pieces of lint are moistened with it and applied. It is advisable to cover the spot with a piece of plantain leaf or other vegetable in order to prevent the oil being absorbed by the remainder of the Bandage.

It will be easy to use this oil in the preparation of plasters and for making embrocations for rheumatism. The squalin could be employed as a medium for certain medicines used in the treatment of cutaneous diseases. It does not seem to grow rancid like *axonge* (?). It has besides a consistence greater than at fat which becomes entirely fluid at the usual temperature of Pondicherry and which requires to be mingled with suet to give it a consistence equal to that of good pomatum.

" I am convinced that on board ship success will attend its application in the treatment of wounds caused by blows or falling.

" I have tried the cod liver oil also in the treatment of wounds and ulcers and did not meet with so much success as from the use of the shark liver oil. The cod liver oil did not seem to me to be superior to any other oil under this report."

(Note of the Exhibitor.)

---

## CLASS III.

### Substances used principally as Food or in its Preparation.

The articles included under this head, are all drawn from the Establishment of Pondi-

cherry. They represent the most important products after indigo,and afford the greatest variety among the agricultural products of the country.

This variety is surprising considering the inefficient mode, followed by the Indian cultivator.

The products of the soil in Pondicherry and in the neighbourhood, are divided into three principal classes. Rices, other cereals and dry Pulses. Among the cereals besides rice,is placed *maize* commonly called *Indian wheat* and which is found, nevertheless, only in a degenerated state in the Peninsula ; and the millets with their numerous varieties—wheat does not grow in Pondicherry. The nomenclature of nutritive grains and oil seeds and fruits that can be collected in the season and which constitute a valuable part of all that our territory produces shall be given hereafter.

After the scientific and tamil designation of each grain, is entered all the general information, which it was possible for the Committee to collect, especially that relating to the importance of products,both of home consumption exportation,and commercial. All the grains are alluded to as articles of exportation, and sight must not be lost of the fact that they are shipped from the principal Ports including Karical—but that Pondicherry takes but a small share in these transactions. In an agricultural point of view and one which chiefly concerns our Head Establishment, the following statistical information offers useful matter.

The total superficial area of the Establishment of Pondicherry is 52,242 Cawnies. The number of inhabitants is 75,759, distributed in 93 principal and 138 second rate villages, occupying 1,608 brick houses, 9,958 cottages, in all 11,566 dwellings. The total extent of cultivatable ground is 38,330 Cawnies. Total under cultivation on 13th of July 1855 was 35,942 Cawnies, 34,200 of which paid taxes amounting to 289,068 francs being at the rate of 8 francs 42 centunes per Cawny.

The land is irrigated by 9 principal canals supplied with river water, 57 Tanks, 53 Reservoirs, 192 courses or nullahs, 2,401 Wells and 171 small private ponds. At the period just alluded to the articles used for agricultural purposes were 1,323 Pikottas, 5,632 ploughs, 1,098 Cows, 10,038 working oxen, 1,822 Buffaloes, 15,312 sheep, goats and lambs, 86 Horses and 297 Asses. The production of the land, the extent of which has been given before amounts to 360,800 gallons or 216,504 hectolitres of Paddy and 263,460 gallons or 158,076 Hectolitres of other small seeds or grains making a total of 624,300 gallons or 374,580 Hectolitres of produce. The prices of rice yearly varies from 6 to 12 paras the Hectolitre and the difference between Kar and Sumba may be estimated at 10 per Cent.

## Paddy.

1. Oryza sativa,(variety), *Kundane sumba,* August, 6-3. Much cultivated. Consumed generally by middling classes. Converted into rice. It forms an article of commerce, and is transported to many places. Hot and bilious. (See 8-14. Note 2.)

2. Oryza sativa, *Kundom sumba.* April 4-3. Same observation. Flatulent.

3. Oryza sativa, *Kattu sumba* or annamoji. April, 4-3. Much cultivated. It is generally used by middle classes. Bilious.

4. ORYZA SATIVA, *Kundani sumba*, April 4-3. Little cultivated. Consumptive generally by middle classes. Flatulent.

5. ORYZA SATIVA, *Kadei Kajuttane sumba* July or August, 7-3. Same observation hot.

6. ORYZA SATIVA, *Kurumbane sumba*, July 8-3. Little cultivated. Generally used by middle classes. Hot.

7. ORYZA SATIVA, *Kutteitambirane sumba* August 4-3. Same observation. Flatulent.

8. ORYZA SATIVA, *Milagu sumba*, August 6-3. Much cultivated. Used by rich classes. Transformed into rice. It becomes an article of commerce, and much is imported. Flatulent.

9. ORYZA SATIVA, *Muttu sumba*, June 4-3. Little cultivated. Used by rich classes. Hot.

10. ORYZA SATIVA. *Maleikuliki sumba*, August or September, 6-3. Same observation. Bilious and Cooling.

11. ORYZA SATIVA, *Peruvela sumba*, June 8-3. Much cultivated. Used by the lower classes. Transformed into rice. It forms an important article of commerce. Flatulent.

12. ORYZA SATIVA, *Palane sumba*, August or September, 4 3. Much cultivated. Used by rich classes. Flatulent.

13. ORYZA SATIVA, *Siraga sumba*, August, 4½-3. Little cultivated. Used by rich classes. Cooling.

14. ORYZA SATIVA, *Sirukadukkane sumba*, July or August, 6-3. Same observation. Hot.

15. ORYZA SATIVA, *Sittadiane sumba*, June, 8-3. Little cultivated. Converted into rice. Exportation limited. Flatulent.

16. ORYZA SATIVA, *Siraboga sumba*, August, 6-3. Little cultivated. Used by rich classes. Flatulent.

17. ORYZA SATIVA. *Perum sumba*, August, 6-3. Much cultivated. Used by all classes indiscriminately. Converted into rice. It is an important article of commerce. Flatulent.

18. ORYZA SATIVA, *Sembalci sumba*, August, 6-3. Little cultivated. Used mixed with other rices. Flatulent.

19. ORYZA SATIVA, *Karupu manakattei*. April, 4-3. Little cultivated. More for exportation than use Employed by middle and poor classes. Hot.

20. ORYZA SATIVA, *Ajugalekar*, April, 4-3. Same observation. Flatulent.

21. ORYZA SATIVA, *Patteikar*, July, 4-3. Much cultivated. Great quantities con-

sumed at home and much also exported. Used by middle, especially poor classes. Flatulent.

22. Oryza sativa, *Mosanakkar*, January, 4-3. Little cultivated. Used by middle and poor classes. Flatulent.

23. Holcus spicatus. *Kumbu*, June, 4-1. Kumbu and its varieties form the most ordinary culture in high grounds. It is sown as a first crop. The grounds after the Kumbu has been reaped, are cultivated with Indigo. Kumbu is used by the middle classes, and by poor cultivators. Its price varies from 3 to 6 francs an hictolitre.

24. Holcus spicatus, (variety), *Sinna kumbu*, April or May, 3-1. Same observation.

25. Holcus Sorghum, *Segappu Cholem*, September or October, 4-1. Cholem and its variety have great affinities with sweet sergho (andropogon niger). The cultivation of which we are now attempting, at the invitation of the Marine Department. (See No. 52 of Nomenclature). The stems slightly sweet. Used as food for cattle, when paddy straw is scarce. Cholem is equally used as food by the middle and poorer part of the agricultural classes. It is less sought after than Cumboo. Its price varies from 2 fr. 50 c. to 5 fr. per hectolitre. Hot.

26. Holcus sorghum, *Vellei cholem*, September, 4-1. Same observation.

27. Holcus sorghum, *Mappu cholem*, September or October, 5-1.

28. Panicum Miliaceum, *Perum samei*, August or September, 4-3. Little cultivated. Used by the poor agricultural classes. Its price varies from 2 to 4 francs the hectolitre. Hot.

29. Panicum miliaceum, *Varagu*, July or August, 5-7. Much cultivated. Used by the poor and agricultural classes. The straw is nourishing for cattle.

30. Cynosurus corocanus, *Kejvaragu*, July, 4-5. Much cultivated. Used by the middle and poorer agricultural classes. Its price varies from 5 to 6 francs the hectolitre. Hot.

### Dry Pulses.

31. Phaseolus max, *Karuppupayaru*, August or September, 4-1. Little cultivated and sought after. Used like Ulundu. Cooling.

32. Dolichos cultratus, *Sinnakaramani*, September, 4-1. Much cultivated. Used by all classes indiscriminately like Ulundu and other dry pulses, and as food for the cattle. Its price varies from 5 to 12 francs the hectolitre. Cooling.

33. Dolichos tetraspermum, *Vellei mossecottei*, August, 6-1. Much cultivated Used by all classes indiscriminately, alone or with other fresh pulses. Price 4 to 8 francs the hectolitre. Flatulent.

34. Glycine tomentosa, *Karumkollu*, September, 4-1. Much cultivated. Used by the middle and poorer classes. It forms the food of horses and cows. Its price varies from 4 to 8 francs the hectolitre. Flatulent.

### Fresh Pulses.

35. Dolichos lablab, *Avereivirei*, July, 6-1. Used by all classes indiscriminately. Hot.

36. Æschynomene grandiflora, *Agattivirei*, November, 12-10. Same observation. Cooling.

37. Cucumis acutangulus, *Pirkkamvirei*, July, 4-1. Same observation. Bilious.

38. Cucumis acutangulus, *Pirkkankai*, July, 4-1. Same observation.

39. Momordica charantia, *Pagalevirei*, April, 4-1. Same observation. Flatulent.

40. Cucurbita lagenaria, (uncoutha), *Sareivirei*, July, 6-1. Same observation. Cooling.

41. Trichosanthes anguina, *Pudalanevirei* or *pudolanvirei*, July, 4-1. Same observation. Hot.

42. Hibiscus esculentus, *Vandeivirei*, July, 4-1. Same observation. Used in medicine as emollient. Cooling.

43. Hibiscus esculentus, *Vandeikai*, July, 4-1. Same observation.

### Oil Seeds.

44. Copra or almond of *Cocos nucifera*. Dried in sun. It is an important article of commerce. The production of the country is very limited, but they are procurable in abundance at Ceylon.

45. Seeds of Argemone mexicana, *Birumarakassi*. It grows in a wild state

46. Seeds of Jatropha gossifolia, *Vellei amanakku*. Same observation.

47. Seeds of Jatropha glauca, *Eriamanakku*. Same observation.

48. Seeds of Semecarpus anacardium, *Seranekottei*. Same observation.

49. Seeds of Bassia longifolia, *Illupecottei*. Much cultivated. Is an important article of commerce.

50. Seeds of Melia azadirachta, *Veppamkottei*. It grows in a wild state. Little exported.

## SECTION I.

### Agricultural Products, Cereals, Dry Pulses, Oils, Seeds and Fruits.

### § 1. Paddys.

11. Oryza sativa, (variety), in tamil: *Kambane sumba*, sown in August, harvested in about four months, can be kept three years. (Exhibitor, Soupouraya Pillay, Member of the Exhibitions' Committee.) Little cultivated. Used generally by the middle classes. Considered by the Medical profession in India as flatulent.

12. ORYZA SATIVA, *Morone sumba*, (1) August, 5-3. (Poulle Appavoo Moodelliar, Exhibitor). Much cultivated. Used by the rich classes. Converted into rice. It forms an important article of commerce. Flatulent. (2)

(1) To avoid repetitions in all the nomenclature which is going to follow, the first number will indicate the number of months at whose ends the grains are gathered, and the 2d the number of years during which they can be kept.

(2) This observation and all others of the same kind which are going to follow, are derived from the generally admitted opinion of the Indian faculty. The Committee have no doubt but that great error exists in some of the opinions quoted, regarding the different properties of grains, &c., but thinking they may in some instances prove useful, they have thought fit not to discard them altogether.

13. ORYZA SATIVA, *Sinna sumba*, November, 4-3. (Local Committee) Much cultivated. Used by the rich classes. Flatulent.

14. ORYZA SATIVA, *Sadei sumba*, September, 5-4. Poulle Appavoo Moodelliar, Exhibitor). Same observation. Cooling.

15. ORYZA SATIVA, *Sirane sumba*, July, 6-5. (Exhibitor the same). Much cultivated. Eaten by the rich. The Europeans seldom use any other. Cooling.

16. ORYZA SATIVA, *Annadana kuru sumba*, July, 3 3. (Exhibitor the same). Little cultivated. Used by the rich classes. Flatulent.

17. ORYZA SATIVA, *Sirumani sumba*, August, 6-3, (Exhibitor the same). Same observation.

18. ORYZA SATIVA, *Peria sumba*, July or August, 6-3. (Exhibitor the same). Much cultivated. Used by middle classes. An important article of commerce. Flatulent.

19. ORYZA SATIVA, *Kerudane sumba*, August or September, 6-3. (Local Committee Same observation. Bilious.

20. ORYZA SATIVA, *Caluraragane*, August or September, 6-3. (Poulle Appavoo Moodelliar, Exhibitor.) Little cultivated. Used by middle classes.

21. ORYZA SATIVA, *Pitchevary*, August or September, 6-3. (Exhibitor the same). Same observation.

22. ORYZA SATIVA, *Codane sumba*, March, April or May, 4-3. (Local Committee Much cultivated. Used by the rich classes. Flatulent.

23. ORYZA SATIVA, *Kaivari sumba*, August or September, 6-3. (Poulle Appavoo Moodelliar, Exhibitor). Little cultivated. Same observation.

24. ORYZA SATIVA, *Manakattey*, April, 4-3. (Exhibitor the same). Little cultivated. Is grown more for exportation than use. Employed by middle and poorer classes. Heating.

25. ORYZA SATIVA, *Kar*, January, 4-3. (Exhibitor the same). Much cultivated. Is

an article of very great local consumption and exported largely. Used by middle and especially the poorer classes. Flatulent.

26. ORYZA SATIVA, *Senkar*, April, 4-3. (Exhibitor the same). Same observation.

§ 2. Millets.

27. HOLCUS SPICATUS, (variety), *Panikumbu*, November or December, 4-1. (Exhibitor the same). Kumbu and its varieties form the most ordinary crop in the high grounds. It is sown as a first crop. The ground after the Kumbu is cut is cultivated with Indigo. Kumbu is used by the middle and poor agricultural classes. Its average price is from 3 to 6 francs the hectolitre. Flatulent and bilious.

28. HOLCUS SORGUM, *Cholem*, September, 4-1. (Poulle Appavoo Moodelliar, Exhibitor). Cholem and its varieties have very great affinities with sweet sorgho (*andropogon niger*), the culture of which has been recently tried at the suggestion of the Marine Department. (See below No. 32). Its stalks are slightly sweet and used as the food of cattle, but only when a deficiency of Paddy straw exists. Cholem is used as food by the middle class and poorer cultivators; but it is less sought after than Kumbu. Its price varies from 2 fr. 50 cs. to 5 fr. an hectolitre, Heating.

29. HOLCUS SORGHUM, (variety), *Alangara Cholem*, September or October, 4-1. (Local Committee). Same observation.

30. HOLCUS SORGHUM, *Muttu Cholem*, January to September. The ear of corn begins to form the third month. Local Committee). Same observation.

31. HOLCUS SORGHUM, *Mandara Cholem*, October or November. (Exhibitor the same. Same observation.

32. ANDROPOGON NIGER, Kunth.; *Holcus niger*, Gmel.; *Holcus nigerrimus*, Art, nec *Andropogon saccharatus*; Rosch.; nec *Andropogon saccharoides*, Sw.; nec *Sorghum saccharatum*, Pers.; *Sorghum nigrum*, Roem. certo. (Perrottet, Esq., Exhibitor.) The stalk of this Monocotyledone plant, newly introduced into India, is naturally very sweet, but of a nature quite different to that of common sugar-cane (*saccharum officinarum*,) Linn. It has lately been much spoken of in France, where it was introduced a short time back. It seems that they extract sugar from it, but not abundantly, it is especially considered as valuable on account of the alcohol which can be extracted from it and which it is said is of a very superior quality. It flourishes in Algeria, and is productive of very advantageous results. As regards its introduction at Pondicherry and in other intertropical countries we do not think that it will prove as advantageous as the sugar-cane, which has more saccharine matter considering its size, and which requires no extraordinary care although it takes seven or eight months to attain its maximum growth. Here, this *andropogon* fructifies and ripens its seeds in two and half or three months time provided the plant has been frequently irrigated especially in the dry hot season that is in May, June or July, which are the least favorable months for the vegetation of this plant. We think that in the cool season, viz., December, January or February, the stalks would acquire very considerable diameter, and give much saccharine matter. Its stalks generally in this season at least or at the moment

of the seeds coming to maturity or little before, get shrivelled and are very sweet, they certainly contain sugar, but not having had any means at our disposal to express the juice, we had to cut them into strips and macerate them in a given quantity of water. This water, after 24 hours maceration of the stalks was very sweet. Having charged a servant to boil this liquid until completely evaporated, in order to obtain from it the crystallized sugar, the operation did not succeed from want of proper attention. Notwithstanding, yet it is certain that sorgho contains more sugar than others of the same nature, which, it is well known all contain more or less. The *sorghum rubens* now called (*andropogon rubens*) especially contains a great quantity of sugar. (Note of the Exhibitor). To complete this series of interesting observations, see the *Moniteur Officiel des Etablissements Francais dans l' Inde*, of 29th February 1856 and 30th January 1857.

33. PANICUM ITALICUM, *Tenei*, April or May. 3 3. (Poulle Appavoo Moodelliar, Exhibitor). Little cultivated. Used as food by the poorer cultivators- It is an article of export. Its price varies from 3 to 6 francs an hectolitre.

34. PANICUM MILIACEUM, (variety), *Samei*, August or September, 4-3. (Exhibitor the same). Little cultivated. Used by poor agricultural classes. Its price varies from 2 to 4 francs an hectolitre. Heating.

35. PANICUM MILIACEUM, *Cadeicanny*, February or March, 2¼-1. (Committee of Exhibitions). Little cultivated. Used by the poor class.

36. CYNOSURUS.....(?), *Natchiny attiquei*, March, April or May, 4-1. (Exhibitor the same). Same observation.

37. CYNOSURUS....(?), *Natchiny karine curuttei*, March, April or May, 4-1. (Committee of Exhibitions). Same observation.

38. CYNOSURUS.....(?), *Vellei natchiny*, March, April or May, 4-1. (Exhibitor the same). Same observation.

39. PASPALUM FRUMENTACEUM, (variety), *peruvaragu*, July or August, 4-6. (Exhibitor the same). Same observation.

40. PASPALUM FRUMENTACEUM, (variety), *Palacuruvaragu*, sown in May or June, transplanted on the 30th day, may be harvested the 70th day. (Exhibitor the same). Little cultivated. Same observation.

41. PASPALUM FRUMENTACEUM, (variety) *Curuvaragu*, August or September, 4-6. (Exhibitor the same). Much cultivated. Same observation.

42. BAMBUSA ARUNDINACEA, *Munguilvirei*. (Exhibitor the same). Little cultivated. Used rarely by the poorer classes.

### § 3. Dry Pulses.

43. PHASEOLUS RADIATUS, *Ulundu*, August, 4-2. (Poulle Appavoo Moodelliar, Exhibitor). Much cultivated. Used by all classes without distinction. Reduced to flour serves

to make cakes, it is given sometimes to horses as stimulating. Its price varies from 5 to 13 francs an hectolitre. Cooling.

44. PHASEOLUS MUNGO, *Passepayaru*, August or September, 4-1. (Committee of Exhibitions). Same observation. Reduced to flour, they use it in washing instead of soap. Its price varies from 4 to 12 francs an hectolitre. Flatulent and Bilfous.

45. PHASEOLUS TRILOBATUS, (variety), *Panipayaru*, January or February, 3-1. (Exhibitor the same.

46. PHASEOLUS TRILOBATUS (variety) *Perumpayaru*, August or September 4-1. (Exhibitor the same). Little cultivated. It is used only with other pulses and to make cakes. Employed by all classes indiscriminately exported to Mauritius. It's price varies from 4 to 10 francs an hectolitre. Flatulent.

47. PHASEOLUS ? *Maleikulikkipayaru*, September, 4-1. (Exhibitor the same.) Very seldom cultivated. It is employed as *Ulundu* and other seeds which have been mentioned before. It's price varies from 5 to 6 francs an hectolitre cooling.

48. DOLICHOS ? *Sadeipayaru* August or September, 4-1. (Exhibitor the same.) Same observation as to *Perumpayaru*. Flatulent.

49. DOLICHOS CATIANG. *Karamany* December or January, 9-1. (Exhibitor the same.) Much cultivated. Used by all classes indiscriminately.

50 GLYCINE TOMENTOSA variety or DOLICHOS UNIFLORUS, *kollu* September, 4-1. Exhibitor the same Much cultivated. Used by middle and poorer classes. Forms the food of horses and cows. It's price varies from 4 to 8 francs an hectolitre. Flatulent.

51. GLYCINE SUAVEOLENS, *Cattukollu* September 4-1. Exhibitor the same. Grows in a wild state. It is used only in medicine Hot.

52. CCIER ARIETINUM, *Cadaley*, August, 6-1. Exhibitor the same. Purchased in market. It is not cultivated in the country. Used by all classes indiscriminately. It is given to horses as stimulating. At Bourbon and Mauritius, it is the common food of cows. Much is exported to those countries. Its price varies from 5 to 10 francs an hectolitre. Flatulent.

53. CAJANUS INDICUS, *Tuvarey*. July 5-1 (Poulli Appavoo Moodelliar Exhibitor) Same observation as for *Ulundu*. Its price varies from 4 to 8 francs an hectolitre.

54. DOLICHOS LABLAB, *Massokottey* August 6-1 (Committee of Exhibitions) Much cultivated. Used by all classes indiscriminately alone or with fresh pulses. Its price varies from 4 to 8 francs an hectolitre. Flatulent.

55. PISUM SATIVUM, *Pattany* September or October 8-(Exhibitor the same. Little cultivated. Used by all classes indiscriminately.

§ 4 Oil Seeds and Fruits.

56. PAPAVER SOMNIFERUM, *Cassacassa*. (Exhibitor the same.) Little cultivated.

57. ANACARDIUMOCCIDENTALE, *Mundrikottey* (Exhibitor the same.) Much cultivated Planted from June to December, it begins to give fruit in the 5th year. It is gathered yearly. Its nut which is an excrescence coming above the fruit and known under the name of "*noix d'acajou*" is employed in sweatmeats for general purposes instead of almonds.

58. SESAMUM ORIENTALE, (variety) *Kurrellu* December or January 3 months and 10 days-(Exhibitor the same.) Much cultivated. It is an important article of commerce.

59. SESAMUM ORIENTALE, (variety) *Kambattei cllu*, June or July 3 (Exhibitor the same.)

60. ARACHIS HYPOGŒA, *Manilakottey* July, August or September 6 or 7 same observation.

61. RICINUS INERMIS, *Peramanaku* March or April 3. (Exhibitor the same.) Same observation.

62. RICINUS COMMUNIS, *Settamanaku* March or April 3. (Exhibitor the same.)

## SECTION II.

INTOXICATING DRUGS. FERMENTED LIQUORS AND SPIRITS OPIUM :

There is no distillery in the Colony, truly in an active state. Some isolated distillers painfully struggle under the monopoly regimen, to which spirits are submitted and produced only a small quantity of spirits necessary for Local consumption the committee doubt not but that the new Tax on spirits which comes into operation on the 1st January 58 will have the effect of putting a total stop to the Manufacture of spirits in the country.

63. ALCOHOL Godifroy, Esq. Exhibitor Price 1 Rs. 4 As. a bottle.

64. MASSANOM or *Bang*, Committee of Exhibitions. Price 6 As. and 3 Pice ½ pound.

65. Sommitts of CANNABIS INDICA *ganja sady*. It may be sown from June to September. Exhibitor the same. This plant, known under the name of *Indian hemp*, is not cultivated in our territory. The leaves reduced into powder mixed with jagry and other substances, serve to make a narcotic known under the name of Bang see the proceeding number.

## SECTION III.

SPICES AND CONDIMENTS.

All the articles understood in this section were purchased at Pondicherry Market.

66. CURCUMA LONGA, *Mantjale* belonging to drimyrrhizees ? family called *Indian saffron* Exhibitor the same. Very active aromatic stimulent generally employed in pharmacy and arts as yellow colouring matter. Its roots only are used. Price 2 As.. a pound.

67. AMOMUM ZINZIBER, *sukku* belonging to *amumum* family from which it was separated by some authors Exhibitor the same. Powerful stimulent, employed in medicine it is used as condiment. Roots only are employed. Price 45 cs. a pound.

68. TRIGONELLA FOENUM GRECUM *vindiom* Exhibitor the same. Seguminous family Stomachic boiled seeds furnish an abundant mutelage. Its seeds only are employed. Price, 5 pice a pound.

69. CORIADRUM SATIVUM *Katamally*. Exhibitor the same. *Ombelliferous* family Stomachic stimulate of digestive functions. Very much used as a *cylinary*? Condiment. seeds only emyloyed. Price 2 Annas.

70. SISON AMMI *omome*. Cultivated at Pondicherry. It is sown in November or December Exhibitor the same. Price 8 Rs. a pound. Little cultivated. It is ordinarily employed in Medicine.

71. CUMINUM CYMINUM, *Siragom*. Cultivated at Pondicherry Exhibitor the same. *Ombelliferous* family, aromatic and sudorific stimulant, it is mixed in food seeds only employed Price 10 As. 4 Pie 4 a pound.

72. FŒNICULUM VULGARE, *perum Siragom*. Cultivated at Pondicherry. They sow it in July, August or September 10. Exhibitor the same. Much cultivated. Price 2 As 6 Pice a pound.

73. NIGELLA SATIVA, *carumsiragom*. Cultivated at Pondicherry. It is sown in November or December 5. Exhibitor the same. Little cultivated. Price 1 Anna a pound.

## SECTION IV.

FECULENT AND FLOURING SUBSTANCES. All the articles figuring under this section, are as yet produced at Pondicherry, only by way of experiment and not for profit. The richness of the country in feculent and flouring substances, will no doubt and eventually to the introduction of a branch of industry, susceptible of very rapid increase.

74. Flour of MARANTA INDICA, *Arrowroot*. J. Le Peltier, Esq., aide-commissaire of Marine at Pondicherry, Exhibitor.

" Season of gathering, November or December. Powder of a root having the same qualities as Manioc, excepting its nutritive principle which is trifling. They make cakes and other food for the sick from it. The physicians prescribe it in the form of clysters to subdue intestinal inflamations. People suffering from weakness of stomach make frequent use of it in Intertropical countries." Note of the Exhibitor.

75. Flour of JATROPHA MANIHOT, flour of Manioc, *Mayakkijangumavu*. Exhibitor the same.

" Season of gathering, November and December. Plant of *Euphorbiacees* family. It is esteemed very much for its analeptic properties, powdered with a little West Indian nut, it is often recommended to strengthen the digestive powers of the convalesent. They denude root of its skin and having dried it for many days, it is afterwards reduced to a powder, by means of a mortar, an operation which produces the flour, which is then passed through a silk sieve. Price 5 annas a pound." Note of the Exhibitor.

76. Flour of JATROPHA MANIHOT, flour of Manioc, *Mayakkijangumavu*. Filatriau, Esq, student, Pharmacien at Pondicherry.

77. Flour of tender root of BORASSUS FLABELLIFORMIS, *Ilapanañkijangumavu.* Exhibitor the same.

78. Flour of BORASSUS FLABELLIFORMIS root, *Panankijangumavu.* J. Le Peltier, Esq. Exhibitor.

"Season of gathering, November and December. Extremely nourishing substance Prepared in the same manner as Manioc." Note of the Exhibitor.

79. Flour extracted from MANGIFERA INDICA, fruit, *Mamparuppumavu.* Exhibitor Mr. Perrottet.

"A New product which we think to be the first to make known, it is ordinarily white absolutely similar to arrowroot, when it is extracted in the ordinary season of the trees fructification which takes place generally in this country, from April to May. Here it is slightly green, the Mango fruit in this locality seldom coming to perfection. The fruit, from which this flour was made, was also obtained when out of season. This powder is prepared in the same manner as that from airemas, amomees and other plants of this kind. It is of an excellent taste and very beneficial to the sick and convalesent." Note of the Exhibitor.

## SECTION V.

### SUGAR SERIES.

### § 1. JAGERY.

Jagery, in tamil, *Vellum*, thick juice of a tree, serves principally to make sugar. Distilled with *acacia leucophloca's* bark, in tamil *velvelane pattei*, produces *arrack pattei.* (1)

(1). This liquor is made here ; it has not more than 18 degrees and is the ordinary drink of lower classes. It is sold at 8 annas the bottle ?. It is soon spoilt. The Committee therefore did not think it advisable to send a specimen of this article.

Besides various uses that they make of this substance in sugar-houses and distilleries, it is employed as food by the poorer classes, and they mix it in cement in certain parts of India, in order to strengthen the cohesive powers of the mortar. This last use, followed formerly at Pondicherry, where Legon de Flaix, Esq., is said to have obtained excellent results from it at the end of the last century, but this particular use has long been given up in this part of the coast.

80. Jagery of Cocos NUCIFERA, *Tennavellàm.* Committee of Exhibitions.

81. Jagery of BORASSUS FLABELLIFORMIS, *Panavellam.* Exhibitor the same.

"On the coast of Orissa they employ the Jagery taken from date trees, *phœnix dactilifera*, in tamil *porissu*, which is of a very easy manufcture, producing a superior quality at less cost and trouble. This Jagery is very scarce on the Coromandel coast, in the neighbourhood of Pondicherry especially, and the Committee were unable to get a specimen of this article. The price of palmtree jagery, varies from 10 to 20 francs the 10 Hilogrammes.

§ 2. Sugar Series.

Pondicherry does not possess sugar Mills the sugar trade was followed there more than 30 years, the experienced succeeded was badly that at the present time no traces exist, except the remains of two old Houses or manufactories—one of which is a total ruin while the other has been transformed into an indigo manufactory. The only sugars which is manufactured here, to this day's date, within territory, is a thick syrup of a very inferior quality that the natives extract from palmtree's jagry, by mean of baking it in a simple earthen vase.

82. Saccharum officinarum *nallavellum* Exhibitor the same Rough sugar candy made by the natives. Price one anna 8 pie a pound.

83. Sugar of Borassees flabelleformis *Panankarkandee* Exhibitor the same Price 2 annas a pound.

## CLASS IV.

### Vegetable and Animal Substances Principally Employed in Manufactures Buildings and in the way of Decoration.

### SECTION FIRST.

Gums and Resinous Gums—Resins and Catchouc or (*Indian Rubber.*)

The settlement of Pondicherry is not rich enough in jungles or Forests to admit of their being turned to any profitable account in the gathering or collection of Gums.

The following articles are exhibited only as isolated specimens, with the view of making known the different kinds of Gums collected in the country, to meet demands for home consumption.

84. Gum of Feronia Elephantum Vilampissini (The Exhibition Committee.)

Very easily affected by the moisture or dryness of the atmosphere; dissolves quickly and entirely in water; and offers great advantages for employment in pharmacy and in the Arts.

Price 1 Franc 5 Centimes per livre French (Pound.)

85. Gum of Melia Azadirachta Veppampissini (Exhibition Committee.)

This Gum is generally employed only in Medicine Price 50 Centimes per livre.

86. Gum of Acacia Arabica, Karuvilampissini (Exhibition Committee.)

Gum Arabic of middling quality always very dirty, generally used in pharmacy and in the Arts; Price 60 Centimes per liver.

87. Gum of Moringa Pterigosperma Murungapissini (Exhibition Committee.)

The same observation as for the Veppempissini may apply;

Price 30 Centimes per livre.

88. The thickened juice of the EUPHORBIA TIRUKALLY, TIRUKALLYPISSINI (Exhibited by Mr. T. Souprayapoulle.)

## SECTION II.

### OILS.

Method of extracting relating to this section, the process of manufacture the means of obtaining Oils &c, see the Report of Mr. Gallois, Montbrun, on the Madras Exhibition of 1855: from page 64 to 90.

The settlement at Karikal possesses a Cocoanut Oil manufactory stopped at this moment; and a considerable number of native Mills, the exact number of which the Committee cannot give.

The Pondicherry settlement has 177 native Mills.

89. Oil of Cocos NUCIFERA, *Tengayennei* (Exhibited by Mr. Erny, Merchant at Pondicherry.)

"Cocoanut Oil not clarified, and not having been subjected to any process of prepara-
"tion: price 4 Francs 65 centimes per measure of six quarts" Note by the Exhibitor.

90. Oil of Cocos NUCIFERA, *Tengayennei* Exhibited by Monsieur Godefroy stated by the exhibitor to be cocoanut Oil not clarified (essence of cocoa.)

Price 2 fr. 40 centimes per "litre."

91. Oil RECINUS COMMUNIS, or common castor Oil *Sittamanakku ennei* (Exhibited by the above.)

Price 1 Franc 20 Centimes per "litre."

92. Oil of the ARACHIS HYPOGEA, *Manilakotteyennei* (Exhibited by Monsieur Soubrayapoulle, Head Dubash of Messrs. Gravier and Co.

93. Oil of BASSIA LONGIFOLIA, *Illoupeyennei* (Exhibited by the same.)

## SECTION III.

### *Substances for dyeing and tanning.*

94. INDIGOFERA TINCTORIA, *Nilam* (Exhibited by the same, as above.)

The cultivation of Indigo has only been recently introduced into the South of India. It is hardly a century since clayed indigo was made in the province in the midst of which Pondicherry is situated: and the first attempts in the manufacture of *fine* Indigo, date only from the beginning of the present century. The Indigo produced in the District of South Arcot and at Pondicherry, known as "Madras Indigo," holds the lowest place in the market. This inferiority may be ascribed to two principal causes; the nature of the soil and the want of water, which prevent the plant from developing itself, as in Bengal and in even

Cuddapah, and also to the mode of fabrication, indigo being still, all round Pondicherry, drawn from the dry leaf, whilst, throughout the rest of India, this method has been gradually superseded by the working up of the green leaf.

Attempts are now being made to secure the disuse of the former method.

95. INDIGOFERA TINCTORIA, *Nilam* (Exhibited by Monsieur Parrassoorama Chettiar merchant at Pondicherry.)

96. Grains of INDIGOFERA TINCTORIA, *Avirivirei* (Exhibited by Monsieur Poulle Appavoo Moodelliar.)

97. BIXA ORELLANA *Venneiseirei*, (Exhibition Committee.)

"*Rocou*" grows at Pondicherry, and in the surrounding country; but is little cultivated, being used by the Natives only for dyeing coarse stuffs of common quality. The colour obtained from it soon fades. The place where *Rocou* is the most cultivated is Mysore. The price of the *Rocou* grain in the Pondicherry bazar, is about 134 Francs per kilogram. It ought to be undoubtedly lower in the Mysore.

98. RUBIA MANJITH, *Manditiver* (Exhibited by Mr. Y. Soupourayapoulle.)

99. OLDENLANDIA ? *Imbouraver*, (Exhibited by the same as above.)

100. MEMECYLON TINCTORIUM, *Cassa* (Exhibited by the same.)

101. MEMECYLON TINCTORIUM (variety) *Vassa cassa* (Exhibited by the same.)

102. MORINDA UMBELLATA (variety) *saya* EITHER NUMAVERE (Exhibited by the same.)

103. MORINDA UMBELLATA, *Nuna* (Exhibited by Poulle Appavoo Moodelliar.)

This root yields a red dye less appreciated than that of the *Sayaver*. The price varies from 45 to 60 Francs per 100 Kilograms.

104. ARECA CATECHU, *Kalippaku* (Exhibition Committee.)

In addition to the well known uses of this substance, it is mixed in India with castor oil used as medicine, and with the Betel leaf which the natives chew.

Price 64 Centimes per livre.

105. COCHIN, *Kassukatti* (Exhibited by the same)

Price 60 Centimes per pound (livre.)

## SECTION IV.

### *Vegetable textile Substances.*

106. Cotton of the GOSSYPIUM RELIGIOSUM (Exhibited by Monsieur Melidor Magry Clerk of Contributions, and of the domain of Pondicherry.)

The produce of an experiment made in a private garden of the town.

107. Cotton of the GOSSYPIUM ARBOREUM *Paruthipan'u* (Exhibited by Monsieur P. Tardivel, Assistant Apothecary at Pondicherry)

Very little cultivated : but is to be the subject of an attempt at *popularisation* by means of plants prepared in the experimental Agricultural Gardens.

108. Fibres of NELUMBIUM SPECIOSUM *Tamareinul* (Exhibited by Monsieur T. Soupouroyapoulle.)

109. Fibres of PANDANUS, *Tajeinar* (Exhibited by Poulle Appavoo Moodelliar.)

110. Cotton of GOSSYPIUM HERBACEUM (Exhibition Committee.)

This Cotton has been gathered from the experimental Agricultural Gardens.

111. Cotton of GOSSYPIUM HERBACEUM, (Exhibited by Monsieur Perrottet.)

" Cultivated American Cotton, introduced about five years since—not yet extensively " cultivated, but growing extremely well, and so to speak, and without care : at any rate requiring but very little. This Cotton comes from certain self sown plants which have not been cultivated.

" It is remarkably white, and fine and long in staple, but without elasticity. The " size of the pods is very remarkable, and the quantity of cotton they contain, no less " so. The shrub produces enormous ones after three or four months growth. It is the " most prolific and productive Cotton Tree that I know of ; and lasts several years, by " means of pruning *now and then*, at proper times."

(Note by the Exhibitor.)

112. Cotton of GOSSYPIUM INDICUM (Exhibited by the same.)

" Country Cotton growing wild in the (jungles.) Not cultivated as far as I know. The " staple very long, tough elastic and of a dull white covered over with seeds of a green or " greenish green colour. It is not cultivated as far as I know, and it would seem either " to have escaped notice, or to have been omitted by the Botanists who have described this " beautiful species, which is in my opinion, but ill-characterised. It is probable that the " peculiar toughness of this cotton has in like manner remained un-recognised as regards " manufacturing purposes, since the shrub has hitherto remained wholly uncultivated as far " as my personal knowledge goes. I am however assured, that it is cultivated in the inte- " rior of the country and that it is to these peculiar qualities, that the stuffs manufactured " from this staple, owe their solidity (strength) and power of retaining the colours printed " on them, principally the blue colour.

" (Guinea Cloth (calico.) The common kind which is cultivated has equally its pro. " perties."

(Note by the Exhibitor.)

## SECTION V.

### *Animal Textile Substances.*

113. BOMBIX MORII (Exhibited by the same.) Yellow and white Cocoons. The ordi- " nary means employed for obtaining these, are, to feed the worm with the leaves of the " indigenous (wild) Mulberry Tree, employing trellised mats for the formation of the " Cocoon by this worm ; to gather in the Cocoons on the sixth day from their formation, stifling the chrysalis before the Butterfly is hatched, and then winding off the Cocoons. The silk thus obtained is wound up to 5-6 Cocoons and the standard is about 5 diagrammes or about 7½ grains (a French weight )

Properties and qualities. It yielding Raw Silk, such is produced in other parts of the world : and which is either of good or bad quality, that is to say, rich or poor in silk, according to the hardness or softness of the Cocoons.

Cost price 1½ franc the kilo—sale price 2 francs 80 Cents to 3 francs the kilo.

1 Franc, 50 Centimes per Kilogram : price of pale, from 2 Francs 80 Centimes, also per kilogram up to 3 Francs—period of gathering in, and sale : all the year round, provided leaves are available : the insect breeding ten times in the course of a year.

Amount of the crops unknown.

It is certainly a scarce article at present, no impulse or encouragement having yet been given to the inhabitants but the country is capable of producing it in abundance.

(Note of the Exhibitor)

114. Cocoons of the ODINA WODIE (Exhibited by the same.)

" Cocoons of the Larvæ which feed on the leaves of the *Odina Wodie.*

(Note by the Exhibitor.)

115. Cocoons of BOMBIX MYLLITA, (Exhibited by the same.)

" Cocoons of BOMBIX MYLLITA, yielding the silk called " *Tussah*"

(Note by the Exhibitor.)

116. Yellow Cocoons perforated, having served for the reproduction of the species; produced by the ninth, or last but one generation of the year 1856: the tenth or last, which has taken place in December, not being yet completed that is to say, the worms springing therefrom, being still in course of education (growth) (not having attained maturity.

(Exhibited by the same.)

117. White Cocoons perforated having served for the reproduction of the species; produced like the above, from the ninth generation of the year 1856.

(Exhibited by the same.)

118. Yellow and white Cocoons perforated, having served for the reproduction of the species called *trivoltini* produced from the tenth and last generation of the year 1856.

(Exhibited by the same.)

## SECTION VII.

### Woods.

We have already observed that the territory of Pondicherry is too confined and too generally cultivated to afford room for many forest products. Extensively cleared however as it is, it presents a sufficient variety of trees to yield a very interesting collection of isolated specimens, for a series which the Committee are indebted to M. de Querret, Sub-Engineer.

121. PHŒNIX SPINOSA, *is'samarum*. A wild tree of the palm family. The timber is not used in carpentry. The leaf-stalks are made into baskets and the leaves into mats. According to the Exhibitor the tree does not exceed 20 to 25 centimetres in diameter.

122. FERREOLA BUXIFOLIA, *Irumbilimarum*. A wild shrub. The timber becomes brittle by exposure to the sun. According to the Exhibitor, the wood is very solid, and is employed for the same purposes being of a similar size as the holly.

123. CASSIA FISTULA, *Sarakkonereimarum*. A wild tree. The Exhibitor states that it is only used for making furniture and tools.

124. SANTALUM ALBUM, *S'andanamarum*. A wild variety of the Sandal; it has no scent; which it probably would have if it was suffered to grow to maturity. According to the Exhibitor the wood is employed for the same purposes as the true sandal.

125. PHYLLANTUS MULTIFLORUS, *Ve'lpula*. The Exhibitor states that the timber is only used for the handles of tools.

126. .....(?) *Velleimadareimarum*. A wild tree. Is used to make carts. According to the Exhibitor it is fit for large carpentry work. It occurs but rarely in the territory.

127. EUGENIA RACEMOSA, *Nircadappeimarum.* A wild tree ; occasionally used for large carpentry-work. According to the Exhibitor it attains a great size and serves for pillars and piles.

128. BERRIA AMMOMILLA, *savandileimarum.* An introduced tree, with a straight trunk and slender branches. It is employed in the construction of pandals and Huts. It serves also for making oars. The leaves are used in medicine for poultices. According to the Exhibitor it is a variety of No. 183.

129. .....(?) *Las's 'alcettamarum.* An introduced shrub. Its leaves are used by the Hindus as vegetables. The Exhibitor states that the timber is no use but the leaves are employed in native medicine.

130. BIGNONIA CHELONAIDES *Padirimarum.* A cultivated shrub, found also in a wild state. It is used in the construction of ploughing utensils and wheels. According to the Exhibitor, the tree attains a great height ; the timber is strong and very elastic.

131. CALYPTHRANTES JAMBOLANA, *Nava'lmarum.* A tree occurring both cultivated and wild. It is employed in the construction of Huts and hulls of boats. According to the Exhibitor the timber is fit for all carpentry purposes.

132. FERRONIA ELEPHANTUM, *Velamarum.* A wild tree yields an abundant supply of a species of gum, like gum arabic. The leaves and roots are used in medicine. The Exhibitor states that the timber is employed like the preceeding for all uses of carpentry.

133. ACACIA LEUCOPHLÆA, *Velvelanemarum.* A wild tree ; used in the country for the construction of Huts ; the bark is employed in the distillation of arrack (see class III Section V.

134. ACACIA LEBBEK, *Cattuvajeimarum.* A cultivated tree, growing also in a wild state. The ryots use it to a great extent for their agricultural implements, in the construction of houses, &c. According to the Exhibitor, the timber is very solid &c. employed in the manufacture of ordnance.

135. ODINA WODIER, *Odia'nemarum.* A tree growing both wild and cultivated is employed sometimes instead of mango wood for making packing boxes &c : its wood is weak and light. The leaves serve for food to one of the species of wild caterpillars which produce *Tassah* silk. The Exhibitor states that planted on the edges of wells it is commonly used as a support for picotahs. The timber is of little use.

136. TECTONA GRANDIS, *Tekmarum.* A variety of the well-known teak tree.

137. BOMBAX PENTANDRUM, *Ilava'nemarum.* A tree growing both wild and in a cultivated state.

138. FICUS RELIGIOSA, *Alamarum.* Grows wild and cultivated is employed in the country for making Huts. The drops are made into Bullock yokes they are very strong and serve as poles for transporting their loads. The sap is used in medicine.

139. PHILLANTHUS EMBLICA, *Nellimarum.* A cultivated tree. The fruit is made into pickles and used a medicine. When properly seasoned, the timber is serviceable for joinery work and carpentry.

140. ACACIA.....(?) *Kon'apul'ia'nemarum.* A wild tree the timber is used for coarse carpentry work. The Exhibitor states that altho' it possesses the same qualities as the Acacia, it is little used.

141. STRYCHNOS NUX VOMICA, *Ettimarum.* Grows wild. The fruit, nut, leaves and bark are used in medicine the planks supply the natives and especially the Mussulmans with tablets on which to inscribe charms and superstitious prayers. The Exhibitor states that the timber is occasionally employed for making tool hand, agricultural implements and naves of wheels.

142. ACACIA ARABICA, *Vela'nemarum.* A wild tree. The wood serves for the fabrication of agricultural implements and its bark for tanning. The leaves we used in medicine and it yields a kind of gum in abundance (see No. 86). The Exhibitor considers it a variety of No. 132; it answers the same purposes.

143. .....(?) *Kattupuvarasa'nemarum.* A wild shrub. The wood is used in carpentry and its fruit, leaves and bark are employed in medicine. According to the Exhibitor tools are made of it.

144. UVARIA LONGIFOLIA, *Assogamarum.* Grows wild the Exhibitor remarks that it is one of the most lofty in the territory. It is used in stones but is rarely worked up for use.

145. MORINDA UMBELLATA, *Nunamarum.* A wild tree. Fruit, leaves root and bark employed in medicine; the roots of a variety not growing larger, than a shrub yield a red dye (see No. 103). This is much cultivated in the South. According to the Exhibitor the wood is rarely used except for the sort of water casks called *Mirubadikattay.*

146. MANGIFERA indica (mango tree) *Mamarum.* Cultivated tree. Yields the mango fruit; bark employed in medicine; the young shoots and green leaves used by Bramins in various ceremonies. According to the Exhibitor, the wood serves to make packing cases and trifling carpentry purposes.

147. FICUS RELIGIOSA (variety), *Arasanemarum.* A tree found both wild and cultivated its leaves are used in medicine. The Exhibitor state that it is considered sacred and grows to a large size the wood is only used for boxes.

148. ERYTHRINA INDICA, *Kaliyanamurukkumarum*. Cultivated and wild. The wood is made into images the flowers fruit, and bark are employed in medicine.

149. MELIA AZIDARATCHTA, *Veppa'nemarum*. Cultivated and wild. All parts of it applied to medical purposes the Exhibitor states that the timber is used for carriages.

150. ..... ? *Madureimarum*. A wild tree the wood used for making cases &c., the bark and fruit for medicine.

151. CORDIA OBLIQUA, *Naruvilamarum*. A wild shrub, serves for no useful purpose according to the Exhibitor.

152. (Variety of No. 160).

153. BOMBAX HEPTAPHYLLUM, *Mullelava'nemarum*. Grows wild and cultivated furnishes a silk or wool for padding, little used. Yields a gum. The wood according to the Exhibitor is of no use.

154. TAMARINDUS INDICA, *Pulia'nemarum*. Found wild and in a state of cultivation the trunk is made into oil presses. It is also used for washing linen. According to the Exhibitor the timber altho' very common and of large scatling is only used for the presses above mentioned.

155. PSIDIUM PYRIFERUM (gouyavier), *Koyamarum*. A cultivated small tree, the fruit of which is the guava. The Exhibitor states that the wood is used for tool handles.

156. BASSIA LONGIFOLIA, *Iluppeimarum*. A cultivated tree. From the Kernels is expressed a very mucilaginous oil. The Exhibitor states the timber to be used in carpentry and joining.

157. ARTOCARPUS INTEGRIFOLIA, *Palamarum*. A cultivated fruit largely used by the people. According to the Exhibitor, the wood is excellent for joinery and cabinet making, it is first yellow and becomes brown by age.

158. .....(?) *Tatteipungucimarum*. A wild tree, all parts of which are used in medicine. The Exhibitor states the wood be used for door and window frames. It is solid and lasting.

159. STERCULIA FŒTIDA, *Kudircipidukkumarum*. Wild and cultivated. The Exhibiter describes the timber as very weak and only fit for slight cases.

160. CASUARINA EQUISETIFOLIA, *Vans'simarum*. Occurs Wild and cultivated. The bark yields tannin and an astringent for medicinal purposes; it yields moreover a dye the discovery of which is due to M. Jules Lepine first class Apothecary of the Navy at Pondicherry to whom medals were awarded for this pr oduct at the Exhibitions of Paris and Madras. The Exhibitor observes that although the timber is excellent for all carpenters and joiners work it is little used in India.

161. SEMECARPUS ANACARDIUM, *Serankotteimarum*. A wild tree, the fruit of which is used as a mordant. According to the Exhibitor the wood though of a good description is not used.

162. ALANGIUM DECAPETALUM, *Ajins'simarum.* A wild shrub. The fruit, leaves, bark and root are used in medicine. A kind of wood oil is extracted from it. The wood according to the Exhibitor is not used.

163. MIMUSOPS ELENGI, *Magudamarum.* Grows cultivated and wild, its flowers are very fragrant. The Exhibitor states the wood to be employed in cabinet making.

164 ..... ? *Munneimarum.* A small cultivated tree, also wild the Exhibitor considers it very scarce and says the Natives use its leaves for vegetables.

165 .... ? *Kavaleimarum.* A small tree growing wild used for handles of tools. The Exhibitor says the wood does not last and is little used.

166 .... SAPINDUS EMARGINATA, *Manippunganemarum.* A wild tree used in cabinet making the nuts supply the place of soap for the toilet. The Exhibitor considers it to be a variety of No. 158 and to serve the same purposes.

167. PTEROCARPUS BILOBUS, *Vengueimarum.* A wild tree the bark of which medicinal. The Exhibitor states it is used in common carpentry.

168. DALBERGIA HETEROPHYLLA, *Tiranimarum.* A wild tree, the wood is said the Exhibitor to be used in joinery.

169. BOMBAX GOSSYPIUM, *Kongumarum.* Wild and cultivated. The wood is made into cases. The silk for padding is rarer and more esteemed than that of *Bombax pentandrum.*

170. CRATÆVA ROXBURGHII, *Mavalingumarum.* Wild tree, bark, leaves and root used medicinally. The Exhibitor describes the wood as useful for turning.

171. CALYPTRANTHES CARIOPHYLLIFOLIA, *Navalemarum.* All variety of No. 13.

172. MELIA AZIDARACHTA, (variety) *Maleivembumarum.* Grows wild. Used to make Catamarans by the fishermen. The Exhibitor states to be also fit for turning.

173. ANACARDIUM OCCIDENTALE, *Mundirimarum.* Found wild and cultivated. Yields *cashew nuts.* The wood according to the Exhibitor is made into packing cases.

174. CALOPHYLLUM INOPHILLUM, *Pinneimarum.* A small tree growing wild. Is not used in carpentry ; the flowers are very fragrant ; the kernels yield an oil to be made into soap.

175. FICUS..... (?) *Kattatimaram.* A wild shrub the wood according to the Exhibitor being liable to the attacks of worms, is not used.

176.. ....., (?) *Velleipaleimaram.* A wild shrub. Made into furniture *Moonbodi katties.* The Exhibitor states its timber to be Excellent.

177. ZIZIPHUS JUJUBE, *Elandeimaram.* Occurs both wild and cultivated the fruit is eaten by the natives the wood according to the Exhibitor is adapted for turning.

178..... (?) *Kumilimarum.* A wild shrub the wood of which is stated the Exhibitor to be liable to split and is not used.

179. PAVETTA INDICA, *Tavaseimarum.* The Exhibitor states that it is only fit for right frames covered with leather.

180. PREMNA INTEGRIFOLIA, (variety). *Passumununneimarum.* Variety of No. 164.

181. TECTONA GRANDIS, *Teakmarum.* Variety of No. 136.

182. ..... ? *Savundalemarum.* A wild tree. According to the Exhibitor it obtains to a large size and is only employed in coarse carpentry and carriage building.

183. DALBERGIA SISSOO, *Nukkamarum.* The timber is known by the name of *bith wood* (*bois de bith.*)

184. BAUHINIA VARIEGATA, *Mandareimarum.* Exhibited by M. Poulle Appavoo Moodelliar. Found both wild and cultivated. Used in the country for making Huts. The roots are medicinal. The wood is not hard.

185. CÆSALPINIA PULCHERRIMA, *Mairkonnereimarum.* The same Exhibitor. The above observations apply equally to this wood. The leaves flowers and roots are medicinal It is of moderate strength.

186. ..... ? *Kuttipilamarum.* The same Exhibitor. A wild tree, used in the country for making Huts. Its leaves are employed in medicine timber very hard.

187. CITRUS AURANTIUM, *Narttanemarum.* Cultivated. It is sometimes used in the country for Huts. The fruits (oranges) are eaten. The leaves are employed in medicine. The wood is very hard.

188. ..... ? *Attimarum.* The same Exhibitor. A wild tree, the fruit of which eaten It yields abundantly a sap supposed to have medicinal quantities and a kind of gum. The wood is carved into images and is very light.

189. ..... ? *Attupuvarassanemarum.* The same Exhibitor. A wild tree made into agricultural implements. The wood is not very hard.

190. *Porasanemarum.* A wild tree with large leaves. The fruits are used in medicine, the wood is light.

The articles comprised within this section are only, according to the Exhibitors experiments.

The skill, of which Mr. Determes has given numerous proofs since his arrival in India leaves no doubt on the minds of the Committee of the successful issue of his exertions.

191. Portions of CHARCOAL made of the Cocoanut, date and areca trees and of branches of feres.

192. STEARIC ACID obtained by a mixture of equal parts of mutton suet and Cocoanut oil.

193. STEARINE from Cocoanut oil.

194. STEARINE from Cocoanut oil (entering into the composition of No. 192.)

The Exhibitor makes the following observation on the above mentioned articles.

"I have no means of thoroughly pressing my manufactures they consequently contain some oleine and coloring matter which would entirely disappear under suitable pressure.

The colour in No. 193 is caused by the sulphuric acid I employed which was impure. The yellow tinge of No. 194 is owing to the remains of a certain quantity of oleine which my feeble press was unable fully to extract. I can make it as white as candle wax. In manufacturing on a large scale I could supply the candle at from 3½ to 4 fanams at a retail price including waste.

## CLASS VI.

### MACHINES AND UTENSILS EMPLOYED IN MANUFACTURES.

All the articles comprised in this class and in class VIII as also the larger portion of those, which appear under class XXII come from the establishment of Mr. Bulliard of Pondicherry.

The rapid progress and relative degree of perfection to which the working in iron and copper has attained in our Chief Colony are owing to the persevering efforts and eminently practical intelligence of Mr. Bulliard. This energetic person, who had at first great difficulties to overcome—has succeeded in collecting at Pondicherry an assortment of goods which is in many ways valuable the manufactures of sugar and the distillers of the French and of the English territories in the neighbourhood find there; in addition to all the articles usually required for their purpose, such simple machines and appurtenances as are necessary for their business.

Here also all the public establishments and the vessels which frequent the port procure supplies of bedding, of iron ware, of carpentry &c.

Mr. Bulliard who obtained two medals at the Madras Exhibition of 1855, and whose business has been prosperously established at Pondicherry, for some years, deserves the patronage of the General Committee.

195. A VENTILATING MILL for cleaning gingilly seed large size—cleaning 50 sacks the hour.

Manufacturer and Exhibitor Mr. Bulliard Price 300 Rupees.

196. A SET OF SIEVES for gingilly seed.

Manufacturer and Exhibitor Mr. Bulliard Price 18 Rupees.

## CLASS VII.

CIVIL ENGINEERING—INVENTIONS AND IMPROVEMENTS RELATING TO ARCHITECTURE AND BUILDING.

The model which appears under this class is produced by Mr. L. Guerre. Colonial Engineer. Chief of the Departments of roads and bridges—to whom Pondicherry owes the larger portion of the irrigation Works, which create its fertility and its wealth.

The bridged anicut at Mangalore through which the heavy floods caused by the hurricane of the 9th of December last passed without impediment must be considered proof against all accidents.

197. MODEL OF THE BRIDGED anicut constructed over the river Kondonveyar near the village of Mangalore—in the District of Villenam.

Exhibitor. Mr. L. Guerre Colonial Engineer Chief of the Department of Roads and Bridges at Pondicherry.

In an Artistic point of view—this work is chiefly remarkable for the system of leverage employed for moving the flood gates—this plan which has not been used previously in this country—unites the advantages of economy with simplicity, which renders it capable of being used by the natives.

## CLASS VIII.

NAVAL ARCHTECTURE—MILITARY ENGINEERING ARMS AND ARTICLES OF GENERAL USE.

198. A double Traversing screw Jack.

Manufacture and Exhibitor Mr. Bulliard Price 40 Rupees.

199. IRON PULLEYS Price 40 Rupees.

200. PULLEYS—ON CAPEI'S plan with pins and sockets of steel.

Manufacture and Exhibitor Mr. Bulliard Price 50 Rupees.

201. A LAMP, (Laxtelle's plan) with a moveable reflector, for binnacles.

Manufacturer and Exhibitor Mr. Bulliard.

202. A VENTILATOR for emigrant ships, for the purpose of renewing the air between the decks—it can also be employed for Hospitals.

Manufacturer and Exhibitor Mr. Bulliard.

## CLASS XI.

Articles manufactured from Cotton : Yarns, Calicoes, Muslins, &c.

The articles comprised in this class exhibit four of the principal manufactures of Pondicherry : viz. spinning by means of Machinery, weaving in the European manner,

weaving in the Native manner, and the weaving and dyeing of the particular description of cloths known by the name of Guinees.

The first idea of introducing into Pondicherry the spinning of Cotton thread by Machinery is due to M. Despassyns de Richemont, Governor General of the French Establishments in India, from 1826 to 1828. This happy conception was carried into effect in a manner equally zealous and intelligent: and, thanks to the combined efforts of M. Ch. Poulain, its able founder, and of the Government, which made large advances of money, the yarn, Manufactory of Ch Poulain and Co. was enabled to supply one of the most pressing wants of the cloth Trade of India, and at the same time to ensure to its shareholders a greater amount of profit than had been originally expected.

This establishment, now under the management of M. de Saint Paul—a worthy successor to M. Poulain, has, since 1846, increased to 16,000 shuttles. There are three engines, of 66 horse-power in the aggregate: and the number of work-people on the premises is 500, men, women, and children. The out-turn amount to 2,400 lbs. of Cotton. Yarn daily; and this quantity is sufficient to meet the demands of a considerable number of weavers, who are established on the outskirts of the Town; and is used chiefly in weaving the cloths called guinees. (see below.)

There exists, moreover, at Pondicherry, a second manufactory of Cotton yarn, less extensive than the one above mentioned. It is at present under the excellent management of M. Potier de la Houssaye.

At Pondicherry, the art of weaving in the European manner, like the manufacture of yarn, by Machinery, dates as far back as the Government of M. Debassayns de Richemont. The only remaining representative of this branch of Trade, the markets for which have of late years, and owing to a variety of causes, gradually fallen off, is now M. Godefroy, who gained two medals at the Exhibition of 1855, and who was recommended by this Committee to the favorable notice of the General Committee, in the following terms.

"Thanks to the superiority of manufacture to which M. Godefroy has enabled the native weavers, and those who are of European descent, to attain, Pondicherry, as well as many of the surrounding English Towns, and most of the Regimental Messes of the Madras Army, have now table-cloths and table-napkins which in their finish, and in the quality of their damask, may be compared, at no very great disadvantage to themselves, with those of Europe."

This Committee feels, that in February 1857, it is not called upon to suppress, or curtail, any of the remarks made on this subject, in February 1855.

Native weaving, has experienced, at Pondicherry, the same falling off as has taken place in it throughout India. Compelled, by European competition, to reduce its out-turn, its resources are now restricted, first to the cloths called guinees, the trade in which, after having become very slack for a time, now seems about to take a wider range; and next, to the manufacture of the coarser kinds of cloth, used by the lower orders of natives. The Committee, surmising that this last-mentioned kind of cloth, which combines cheap-

ness with durability, may possibly create some interest at Madras, has thought it right to forward samples of the sorts principally in use.

Pondicherry contains 4,126 Looms, and a somewhat greater number of Weavers. The last of the principal branches of Trade which belong to class XI is the Dyeing of the cloths called Guinees. In this respect, during 200 years, Pondicherry has experienced no falling off. On the contrary, the present superior fineness of texture, owing to the yarn being now spun by Machinery, has necessarily caused a corresponding superiority in the appearance of the cloths, after dyeing.

There are 125 dyeing establishments in the territory of Pondicherry.

203. COTTON SPUN from the GOSSYPIUM RELIGIOSUM. (Exhibitor, M. Melidor Magry, commis des Contributions et du domaine à Pondicherry.)

204. THREAD, No. 18, from the spinning establishment of Saint-Paul and Co. (Exhibitor Purserama Chetty, merchant of Pondicherry)

Price 4 fr. 20 Cent. the five-pound packs.

205. THREAD No. 19, from the same establishment (same Exhibitor) same price.

206. THREAD No. 12, from the same (same Exhibitor) same price.

207. THREAD No. 22, from the same (same Exhibitor).

Price 4 fr. 80 Cent.

208. A PIECE OF COMBAYE 7½ yards in length (same Exhibitor).

Price 4 fr. 20 Cent. the piece.

209. Eleven yards of Drill (same Exhibitor).

Price 5 fr. 40 Cent. the piece.

210. A PIECE OF KINDA'NE, made with European thread, eleven yards long, (same Exhibitor).

Price 4 fr. 20 Cent. the piece.

211. A PIECE of KINDA'NE in two threads, eleven yards long (same Exhibitor).

Price 2 fr. 30 Cent. the piece.

212. A PIECE OF KINDA'NE in four threads, eleven yards long (same Exhibitor).

Price 4 fr. 20 Cent. the piece.

213. A PIECE OF BLUE, CLOTH, called guinee, of 16 conjons (qu. Punjums) weighing five pounds (Exhibitors, Messrs. Balakistna Purserama and Co., merchants of Pondicherry.

Price 9 fr. the piece.

214. A PIECE OF BLUE CLOTH, called guinee, of 12 conjons, weighing four pounds (same Exhibitors).

Price 7 fr. 20 Cent. the piece.

215. PIECE OF UNBLEACHED CLOTH, called guinee, of 16 conjons, weighing five pounds (same Exhibitors).

Price 6 fr. Cent. the piece.

216. PIECE OF UNBLEACHED CLOTH, called guinee, of 12 conjons, weighing four pounds (same Exhibitors).

Price 5 fr. 20 Cent. the piece.

217. A BAG woven and made up at the spinning establishment of Potier and Co. at Pondicherry; used for packing oil-seeds (Exhibitor Purserama Chetty, merchant).

Price 90 Cent. the Bag. These Bags, whose quality and strength of texture admit of their being used singly, are sold again, second-hand, in Europe for 30, and even for 45 centimes. They have thus a great advantage over the Gunny Bags of Bengal.

218. DAMASK TABLE CLOTH, fringed on all four sides, 8 feet square (Maker and Exhibitor, M. Godefroy.)

Price 19 fr. 20 Cent. the piece.

219. SAME TABLE CLOTH without fringe (same maker and Exhibitor).

Price 16 fr. 80 Cent.

220. TABLE CLOTH, oil de perdrix, fringed on all four sides, six feet square, (same maker and Exhibitor).

Price 9 fr. 15 Cent.

221. SAME TABLE CLOTH, without fringe, (same maker and Exhibitor).

Price 6 fr. 75 Cent. the piece.

222. WORKED TOWELS, in double thread, for bathing, 3 feet square, without fringe (maker and Exhibitor, the same.

Price 14 fr. 40 Cent. the dozen.

223. WORKED TOWELS, for the toilet, without fringe, 3 feet square. (same maker and Exhibitor).

Price 12 fr. the dozen.

224. NAPKINS, damask and fringed, 24 inches square (same maker and Exhibitor).

Price 12 fr. 60 Cent. the dozen.

225. DAMASK NAPKINS, 24 inches square without fringe (same maker and Exhibitor).
Price 12 fr. the dozen.

226. Damask Napkins, 20 inches square, fringed (same maker and Exhibitor).

Price 8 fr. 40 Cent. the dozen.

227. Same Napkins, without fringe (same maker and Exhibitor).

Price 7 fr. 20 Cent. the Dozen.

228. Damask Napkins, 30 inches long, by 20 broad, fringed (same maker and Exhibitor).

Price 12 fr. 60 Cent. the dozen.

229. Same Napkins without fringe (same maker and Exhibitor).

Price 12 fr. the dozen.

230. Table Napkins, a grains d'orge, or with the nap on, 20 inches square fringed (same maker and Exhibitor).

Price 7 fr. 80 Cent. the dozen.

231. Damask Towels, for the toilet, 32 inches square (same maker and Exhibitor).

Price 24 fr. the dozen.

232. Worked Table napkins, 30 inches by 20 with fringe (same maker and Exhibitor).

Price 7 fr. 20 Cent. the dozen.

233. Same Table Napkins, without fringe (same maker and Exhibitor).

Price 6 fr. 40 Cent. the dozen.

234. Napkins, a grains d'orge, 30 inches by 20, with fringe (same maker and Exhibitor).

Price 10 fr. 80 Cent. the dozen.

235. Same Napkins without fringe (maker and Exhibitor the same).

Price 11 fr. 20 Cent. the dozen.

236. Damask Towels, for the toilet, 36 inches by 24, with fringe (same maker and Exhibitor).

Price 18 fr. the dozen.

237. Same Towels, without fringe (same maker and Exhibitor).

Price 18 fr. the dozen.

238. Worked Table Napkins, 20 inches square, with fringe (same maker and Exhibitor).

Price 17 fr. 40 Cent. the dozen.

239. SAME TABLE NAPKINS, without fringe (same maker and Exhibitor).

Price 4 fr. 20 Cent. the dozen.

240. NAPKINS, oil de perdrix, 20 inches square, with fringe (same maker and Exhibitor).

Price 7 fr. 20 Cent. the dozen.

241. SAME NAPKINS, without fringe (same maker and Exhibitor).

Price 6 fr. 40 Cent. the dozen.

## CLASS XIII.

### ARTICLES MANUFACTURED OF SILK.

The Products comprised within this class as well as those already mentioned in Section V of class 4 are from the Silk Factory of Pondicherry—the Director of which is M. Perrottet—whose reputation as a learned Botanist is a sufficient recommendation, and one to which the Committee feel they cannot add.

The mere question of the production of Silk at Pondicherry in a theoretical and scientific point of view, has been already most satisfactorily settled by M. Perrottet. The future alone however can dispose of the matter, viewed in an industrial aspect.

242. BOMBYX MORII, yellow and white raw silk.

(Exhibited by M. Perrottet.)

(Model of manufacture. Threaded, crossed and made by means of the latest improved French Machines.

450. GRAINS. Cocoons 5-6.

Properties or distinctive qualities of the product, and its uses—very strong, elastic and brilliant in color and not liable to waste in winding Prime cost 13 Rupees 14 Annas a lb. present selling price at Lyons 39-8.

Produceable the whole year round—quantity of produce not yet precisely ascertained.

Scarcity or abundance of the article in the country, and the mean or average production per year—only one establishment for the production tried in the first instance, as an experiment and latterly manufactured for sale. If encouraged amongst the people, this product would yield considerable quantity in the coarse of a year. Is an important manufacture for India generally, but especially so for this part of it.)
(Note by Exhibitor.)

243. SILK THREAD from the cocoons after they have been left by the Larvæ of Bombyx Morii.

Prime cost 6 Annas 8 Pie a lb. selling price in Europe 1 Rupee 4 Annas or 1 Rupee 7 Annas 8 Pie per lb.

This article is tolerably abundant and easily enough obtained—is very beautiful and considered lasting wear. It is used in the manufacture of small shawls, caps, stockings, gloves, &c. and is in great demand and rather scarce in Europe.

(Note by Exhibitor.)

244. Floss silk of white cocoons or the outside covering of the larvee of Bombyx Morii.

Prime cost 2 Annas a lb. highest. Price of sale in Europe from 13 Annas 4 Pie to 1 Rupee 8 Annas a lb.

Is used in the manufacture of silk Hats, gloves, socks &c.

(Note by Exhibitor.)

245. Floss silk of yellow cocoons. The first threads spun by the larvee of the Bombyx Morii: to attach its cocoon Which becomes the outside envelope or cover of the cocoon.

(Note by Exhibitor.)

Prime cost and price of sale—the same as the above named cuttings or scraps.

246. (Tresons) from yellow cocoons prepared and drawn out used in the manufacture of ribands, shawls, and various other articles.

(Exhibitor the same.)

Price 5 Annas 8 Pie a lb. selling price 1 Rupee 7 Annas 8 Pie a lb.

This product is both plentiful and precious and is as easily obtained as the cocoon.

(Note by Exhibitor.)

Cuttings or scraps (Kisons) from white cocoons prepared and employed for the same purposes as the preceding cost and selling prices the same.

(Note by Exhibitor.)

All these refuse portions of the cocoons being the first spun by the caterpillar are a like in their nature being prepared in the same manner—they vary however in price according to their strength and tenacity. They are all much sought after in France, where they are spun after having undergone the process of carding by Machinery.

(Note by Exhibitor.

248. Raw and Roped thread Gloves dyed and knitted, of the latter from the pierced cocoons produced by the caterpillar which also feeds on the leaves of the Odina Wodies.

(Exhibited by the same.)

Method adopted in the manufacture the cocoons are first softened in a decoction of potash or ashes, then picked and cleaned, after which without having been either combed or carded are roped or wound. The Gloves are then knitted with the thread thus prepared.

Properties or distinctive qualities of the product and its uses. It is excessively strong tenacious elastic and glossey. It would scarce be possible to manufacture cloths of it, however—as the substance is so stiff and strong that after one or 2 washings they would become too hard for use—but this would be a new branch of industry in this part of India —which would doubtless become of real importance. This is not an industrial Product, the insect of caterpillar being only found in its wild state. The attempts which have been made to rear these in confinement have succeeded perfectly and have proved that it is possible to obtain 4 of cocoons in the course of a year, and that the raw silk thus produced is of excellent quality.

(Note of Exhibitor.)

249. " RAW and Roped silk thread thrown from caterpillars which feed on the leaves of various trees.

(Exhibitor the same.)

Terminalia Catappa Syzygium Jambolanum, Zizyphus lotus, &c., names of the different trees upon which these silk worms feed.

Mode adopted in the manufacture. This product is also one which is not an industrial product. This insect like the preceding being only found in the wild state, although, if it were subjected to regular domestication, and training it would prove of great value to the country, and would amply remunerate the first manufacturers. The cocoons softened in a decoction of potash or ashes are picked and thrown.

Properties or distinctive qualities of the product. The small sample skein which we exhibit was wound as well as that of the Odina Wodier by a newly invented spinning-wheel—without undergoing the process of combing or twisting i. e. in its raw or normal state. The contents of the cocoons are easily emptied and produce raw silk called Tussah which as is well known, is excessively strong tenacious elastic and glossey all important qualities which are generally prized and sought after by silk Factors in all countries.

The caterpillar would be the more easy to breed as the trees, the leaves of which it prefers grow wild and bear the whole year round. It has also been ascertained by us that the Bombyx Myllitta the perfect insect which produces this larvæ breeds 4 times a year.

A certain number of these larvæ are now being reared in our silk worn nursery at Pondicherry.

(Note by Exhibitor.)

## CLASS XIV.

MANUFACTURES FROM FLAX, HEMP AND THEIR SUBSTITUTES—ROPES OF ALL KINDS.

250. ROPE from the manufactory of Saint Paul and Co. weighing 4⅞ lbs.

(Exhibited by Mr. Purserama Chettiar). Price 6 Annas a lb.

251. ROPE from the same manufactory weighing 4⅛ lbs.

(Exhibited by the same) Price do.

252. ROPE from the same manufactory weighing 5 lbs.

(Exhibited by the same) Price do.

253. ROPE from the same manufactory weighing ¼ lb.

(Exhibited by the same) Price do.

254. ROPE manufactured of *Pandanus* tajeikaya'ru.

(Exhibited by Mr. Poulle Appavoo Moodelliar.)

## CLASS XV.

CERAMIC ARTS, PORCELAIN POTTERY, &c.

255. CHINESE Bonze or Priest made of delph and coated over with a metalli varnish.

(Exhibited by Mr. A. de Babick Merchant of Pondicherry.)

256. CHINESE herdsman or spepherd on an ox made of delph and coated over with a metallic varnish.

(Manufactured and Exhibited by the same.)

## CLASS XXII.

IRON HARDWARE, &c.

257. SAMPLE of Metallic cloth made at the establishment of Mr. Bulliard at Pondicherry.

(Manufacturer and Exhibitor Mr. Bulliard.)

258. SAMPLE of Metallic Cloth.

(Manufacturer and Exhibitor Mr. Godefroy.)

Price 6 Rupees a yard.

259. A Box of brass utensils for travelling.

(Manufacturer and Exhibitor Mr. Bulliard.)

Price 20 Rupees.

260. An iron cot—the cloth spun of Bengal thread at the establishment of Mr. Bulliard.

(Manufactured and Exhibitor by the same.)

Price 25 Rupees.

## CLASS XXVII.

### Articles manufactured with mineral substances and employed in building or for decoration, such as marbles, slabs, Porphyry, artificial stones.

The Committee consider it their duty to call attention to the interesting article comprised in this class, the importance of the Hydraulic Works in India, the excellence and cheapness of the Cement exhibited by Mr. Carriol would appear to justify the expectation that this article will come into most extensive use in the Country.

261. Artificial Block in Hydraulic Cement (Exhibitor Mr. Carriol conductor of Bridges and Roads of the 1st class at Pondicherry.)

262. Fragments of Hydraulic mortar and Bricks joined with the same mortar, which have been immersed for a year in Sea Water and have attained to an extreme degree of hardness (Exhibitor the same.)

263. Artificial Hydraulic lime (Exhibitor the same.)

The Exhibitor makes the following observations on the above three articles. The "Hydraulic lime contained in the first bottle was made on the 20th December 1855 in the "usual manner with the exception of some modifications introduced in the mistures in the "relative proportion of the silicious earths and the degree of heat required for its preparation.

"It may be used pure with a mixture of one quarter of fine sand, for the interior "coverings of Cisterns and other reservoirs intended to contain water.

"Mixed with a third part of ordinary lime and one third of fine sand, it gives an ex-"cellent mortar which can be used for foundations in fresh or salt water. It begins to "harden twenty four hours after immersion and continues to do so for a year when it attains "its extreme degree of hardness and will bear comparison with that of a brick of the first "quality of this country.

"It is not necessary to wait that length of time before building on it—provided "Hydraulic Cement is used for the base of the foundation, after five or six days of im-

" mersion, you may without fear erect—any kind of masonery on it. In weight of the " masonery indeed only accelerating the process of hardening by compressing the mortar " pits the little cavities which are apt to form during the process of *drying ?*

" The Artificial Block which I have the honor to exhibit has been manufactured with " a similar mortar. It was placed in the sea immediately after it was made and remained " there during a whole year constantly covered with water.

" The two pieces of brick contained in the second bottle have been joined by a mortar " similar to that of the Block and have been immersed in Sea Water during the same length " of time. It is now easy to satisfy ourself from the appearance of the mortar that it has " acquired a hardness greater than that of the brick itself.

" The fragments of mortar contained in the same bottle, are of the same manufacture " and show by their hardness acquired in the water in which they are now immersed a " degree of utility, of economy and of durability in work, which will, I hope, be appre- " ciated by the Jury.

" The samples which were shown at the Exhibition of 1855 were of a very inferior " quality to those now exhibited. They had only been immersed for fifty days and con- " sequently had not acquired the extreme degree of hardness. There was besides an error " in the Hydraulic lime, the mixtures having been made with an earth containing a large " quantity of soda, the principal course of their failure when exposed to the air."

(Note of Exhibitor.)

## CLASS XXX.

### Fine Arts, including, Coins, Books etc.

264. Studies on the Civil Law of the Hindoos ; researches in comparative legislation on the Laws of India, the Laws of Athens and of Rome and the customs of the Germans, by E. Gibelin Solicitor General at Pondicherry. A Toutin and E. V. Geruzet Printers to Government 1846—1847. (Exhibitor Mr. Geruzet Chief of the Government Printing establishment at Pondicherry.)

265. Report to His Excellency the Governor of the French Possessions in India, of the Exhibition opened at Madras on the 20th February 1855, by Mr. A. Gallois, Montbrun Collector and President of the Commission of Agriculture and Commerce, Pondicherry, Geruzet, Printer to Government (Exhibitor the same.)

266. MANUAL OF HINDOO LAW and of Civil and Criminal Legislation adopted to the French Possessions in India dedicated to M. leContre Amiral deVerninac Saint Maur Governor of the French Possession in India, by F. N. Laude, Imperial Judge at Chandernagore, Pondicherry, E. V. Geruzet. Printer to Government.

1856. (Exhibitor the same.)

267. Proof Impression. Tamil and French (Exhibitor the same.)

Pondicherry 10th February 1857.

The President of the Exhibition Committee, A. G. Montbrun.

P. S.—All the scientific denominations included in the preceding nomenclature (those furnished by the Exhibitors themselves, excepted) as well as the observations appended to the list of articles composing Section III. of Class III. and Section I. of Class IV. are due to Mr. Nozeille Secretary to the Committee. His departure for France at the time that I drew up this nomenclature has prevented its value from being enhanced by the addition of his signature.

# SUPPLEMENT.

## CLASS II.

### CHEMICAL AND PHARMACETIAL PRODUCTIONS, AND PROCESSES; VEGETABLE AND ANIMAL SUBSTANCES EMPLOYED IN MEDICINE.

### SECTION 1ST.

#### CHEMICAL PRODUCTIONS AND PROCESSES USED IN MANUFACTURES AND ARTS.

5. A specimen of Prussian Blue manufactured at Pondicherry (manufacturers and Exhibitors. M. M. Rungasawmy Moodelly and Soupourayapoulle, member of his Exhibition Committee at Pondicherry.

"This production is the result of an attempt. The Exhibitor can engage to deliver "25000 lbs. per annum of a superior quality to that of the sample exhibited at 3 fr. per "lb."

(Note of Exhibitors.)

His Excellency Ramachundra Tondiman, Bahaudur Rajah of Poodoocottah.

RAW MATERIALS.

MINERAL KINGDOM.

9178 Coperas.
9179 Fleshy Coperas.
9180 Soap Manufacturing Earth.
9181 Bangles do. do
9182 Earth salt.
9183 Salt Manufacturing earth.
9184 Lime stones.

VEGETABLE KINGDOM.

GRAINS.

9185 Mottag coorooveÿ Paddy.
9186 Coolodichaw do.
9187 Aravadan coorooveÿ do.
9188 Varagoo.
9189 Tenay.
9190 Coorooday Valee Paddy.
9191 Capay.
9192 Samay.
9193 Cacnicholem.

MACHINERY ARMS.

9194 Spears.
9195 Bow and arrow in one.

MANUFACTURES.

9196 Images cut in Nuts.

HORNS.

9197 Box.
9198 Do. of inlaid work.
9199 Vessels of different sizes.
9200 Cup.
9201 Do. Small.
9202 Watch like Box and chain.

WOODS.

9203 Boxes.
9204 Flute.
9205 Jamboos Vypalay.
9206 Cup do.
9207 Coojas. do.
9208 Chomboo.
9209 Cups.
9210 Rectangle Box for writing.
9211 Boxes died after the Tortoise shell fashion.
9212 Walking canes.
9213 Water sprout.

IVORY WORKS.

9214 Puppets.
9215 Combs.
9216 Cups.
9217 Goolab daus.
9218 Jawboos.
9219 Boxes of different sizes.

WAX WORK.

9220 Vegetable likes of different kinds.

PITH WORK.

9221 Collectors Cutcherry.
9222 Cavary Bridge.
9223 Native Pagoda.
9224 Catholic Church.
9225 An English lady with two children.
9226 Do. do do.
9227 Native Pairs.
9228 Visvanadasawmy Secretary to Poodoocottah.

EARTH.

9229 Lumps of melted earth of Bangels.
9230 Bangles of different colours.

LEAVES.

9231 Palmira Fans.

SILK WORK.

9232 Red Pattadai Duppatal.
9233 Oodooratty Cheddy.
9234 Vanoogopalsawmy.
9235 Mysasoor Mardang.

LACE WORK.

9236 Muslin with lace and silk work yards 5½.

TIN.

9237 Self moving carriage.
9238 Ink horn and sand Box.

COUNTRY MARBLE.

9239 Paper weights 6.

# RAJAHMUNDRY.

*Exhibition Nos. corresponding with those of Local Committee.*

| Local Committee No. | Progressive No. | Local Committee No. | Progressive No. | Local Committee No. | Progressive No. |
|---|---|---|---|---|---|
| 1 | 3822 | 29 | 3807 | | 8425 |
| 2 | 3823 | 30 | 3808 | | 8426 |
| 3 | 3824 | 31 | 3898 | | 8427 |
| 6 | 3826 | 32 | 3901 | | 8427½ |
| 4 | 3825 | 33 | 3909 | | 8428 |
| 5 | 3827 | 34 | 3906 | 46 | 8428½ |
| 7 | 3828 | 35 | 3831 | | 8429 |
| 8 | 3 21 | 36 | 3921 | | 8430 |
| 9 | 3829 | 37 | 3922 | | 8432 |
| | 3830 | 38 | 3923 | | 8431 |
| 10 | 3832 | 39 | 3915 | | 8433 |
| | 3833 | 40 | 3910 | | 3844 |
| 11 | 3831 | 41 | 3911 | 16 | 3923 |
| 12 | 3836 | 42 | 3912 | 24 | 8307 |
| | 3837 | 43 | 3913 | | 8308 |
| 13 | 3838 | 44 | 3914 | | 8309 |
| | 3839 | 45 | 3916 | | 8310 |
| | 3840 | | 3917 | | 8311 |
| | 3841 | | 3918 | | 8312 |
| 14 | 3842 | | 3804 | | 8313 |
| 15 | 3843 | | 3805 | 18 & 19 | 8314 |
| | 3899 | | 3806 | | 8315 |
| | 3900 | | 3817 | | 8316 |
| | 3901 | | 3816 | | 8319 |
| | 3902 | | 3803 | | 8320 |
| 20 | 3903 | | 3809 | | 3846 |
| | 3904 | | 3813 | | 3847 |
| | 3905 | | 3815 | | 3848 |
| | 3906 | | 3807 | | 3849 |
| | 3907 | | 3819 | | 3850 |
| | 3908 | 46 | 3811 | | 3851 |
| 21 | 3881 | | 3814 | | 3852 |
| | 3882 | | 3818 | | 3853 |
| 22 | 3883 | | 3812 | | 3854 |
| | 3884 | | 8415 | | 3855 |
| | 3885 | | 8416 | | 3856 |
| | 3886 | | 8417 | 25 | 3857 |
| 23 | 3887 | | 8418 | | 3858 |
| | 3888 | | 8419 | | 3859 |
| | 3889 | | 8420 | | 3860 |
| | 3890 | | 8421 | | 3861 |
| 26 | 3891 | | 8422 | | 3862 |
| 27 | 3895 | | 8423 | | 3863 |
| 28 | 3892 | | 8424 | | 3864 |

## RAJAHMUNDRY.

*Exhibition Nos. corresponding with those of Local Committee.*

| Local Committee No. | Progressive No. | Local Committee No. | Progressive No. | Local Committee No. | Progressive No. |
|---|---|---|---|---|---|
| 25 | 3865 | 25 | 3871 | 47 | 3877 |
| | 3866 | | 3872 | 48 | 3878 |
| | 3867 | | 3873 | 49 | 3879 |
| | 3868 | | 3874 | 17 | 8318 |
| | 3869 | | 3875 | 50 | 8317 |
| | 3870 | | 3876 | 51 | 3880 |

# RAJAHMUNDRY.

THE Local Committee regret that a larger number of Native Exhibitors have not come forward on the present occasion. Every possible care was taken to make the objects of the Exhibition known throughout the Province, and a very large number of notices in the vernacular were distributed. At the last Exhibition the greater portion of the articles exhibited, cloth of various kinds, were purchased by the Local Committee. It did not appear to the Committee, that any useful end would be attained by purchasing and forwarding manufactured articles of a similar kind on the present occasion.

Goroo Pariah, Exhibitor.
1 Long Cloth, Fifty-six Punjum, yards thirty, Rs. 100.
2 Long Cloth, Forty Punjum, yards thirty, Rs. 50.

Uukum Tautiah, Exhibitor.
3 Long Cloth, Forty Punjum, yards thirty-two, Rs. 55.
6 Izaree, Thirty Punjum, yds. sixteen, Rs. 16.

Bullah Purvatauloo, Exhibitor.
4 Long Cloth, Fifty Punjum, yards thirty-two, Rs. 80.
5 Long Cloth, Forty-nine Punjum, yds. thirty-two, Rs. 70.

Janah Tautiah, Exhibitor.
7 Long Cloth, Forty-six Punjum, yds. thirty-two, Rs. 70.

Condah Soobbunnah, Exhibitor.
8 Long Cloth, Forty-six Punjum, yds. thirty-two, Rs. 70.

Pitcheka Polesetty, Exhibitor.
9 Fine Long Cloth, 2 pieces, Rs. 180.
All the above made with thread spun by hand in this District.

Bunky Baupunnah of Nursapoor, Exhr.
10 Palampores, two, large, Rs. 28.
11 Do. do. small, Rs. 14.

Bylimsaheb of Rajahmundry, Exhibitor.
12 Tent Carpet, four yds. square Rs. 14.

Moochee Lutchman, Exhibitor.
13 Gold embroidered Pouches, four, Rs. 4 each.

Mogunty Namussevoy of Toony, Exhibitor
14 Daggers, two, Rs. 8 each.
15 Knife, fine steel, Rs. 5.

The Local Committee, Exhibitors.
20 Leopard skins, mine, *dressed.* Tiger skin, one, do.
21 Wild buffalo horns, 2 pairs.
22 Elk horns, four pairs.
23 Stag horns, four pairs.

Sutty Gungereddy, Exhibitor.
26 Hemp (*Janapanar*) 1 maund, Rs. 2.
27 Kittanar, one viss, As. 12.

Sutty Rameredddy, Exhibitor.
28 Hemp, one maund, Rs. 1-2.
29 Cotton, 2 maunds, Rs. 3-3-2.

Covoory Soobbareddy, Exhibitor.
30 Hemp, one maund, Rs. 1-2.
31 Rush Cotton (*Jammoodoody*), one maund, Rs. 2-4.

Sutty Nurseredddy, Exhibitor.
32 Hemp, one maund, Rs. 1-2.
33 Tobacco, 2 maunds, Rs. 5-5.

Elapakoorty Ramannah, Exhibitor.
34 Gogoonar, 1 maund Rs. 2-8.

Chagondy Narrainaswamy of Doddeputla, Exhibitior.
35 Fine Long Cloth, 1 Piece, Rs. 80.
36 Model of machine for crushing Sugar cane.
37 Improved do.
38 Model of machine for raising water.
39 Cigars, two hundred, @ 8 As. ℔ hundred.
40 Imitation Manilla Cheroots, two hundred and fifty, @ 1 Rupee do.
41 Large Cheroots, two hundred and fifty, @ 8 Annas ℔ hundred.
42 Do. do. do. @ 6½ As. do.
43 Do. do. do. @ 4½ As. do.
44 Do. do. do. @ 5½ As. do.
45 Sugar, two maunds, @ 3½ Rs. ℔ maund.

Chinta Veerabhadroodoo, Exhibitor.
46 Mattrass without seams, Rs. 25

F. L. Moncrieff, Esq. Civil Engineer, in charge of Dowlaishwarum Workshop, Exhibitor.
Model, Passengers' transit boat, designed and constructed for the Rajahmundry Navigation Company, January 1856 — scale, 1½ inch to a foot. Boats on this model now daily ply on the canals between Dowlaishwarum, Cocanada, Coringa and Samulcottah.
Jib Crane, Rs. 550.
Double geared Crab Winch, Rs. 176.
Single do. do. Rs. 121.
Cotton spinning Machine.
Rope making Machine with hemp Crushers, &c. complete.

Rs.

9 Inches Iron house Pump, 270.
4½ do. do. 60.
Screw pile (Iron).
One set Tram wagon wheels, 135.
Wood Turners Lathe, 370.
Specimens of woods.
Do. do. Rope and Hemp.
Cotton Rope Machine.
Six Iron Blocks.
Charcoal Pipe, as used in sugar works.—

Mr. W. C. Malley, Supeintendent, Dowlaishwarum Work-shop, Exhibitor.
Model of Saw Mill, invented by himself.

Charles Rundall, Esq. of Razole, Exbr.
Auranta Wine, 1 doz. quarts, Rs. 12—the genuine product of Indian fruits, manufactured in the manner adopted in the Wine Districts of Europe.
White Wine Vinegar, made from the lees of Wine, ½ doz. Rs. 2-12.
Cassava flour, produced from the dried roots of Jatropha Manhiot, 20 lbs., Rs. 3-12.
Tapioca powder, obtained by expressing the fresh roots of Jatropha Manhiot, 20lb. Rs.7-8.
Tapioca, the above powder granulated by the application of heat, 20 lbs., Rs. 13-12.

C. R. Pelly, Esq. Exhibitor.
16 Iron ore and Iron from the Taudemullah Talook.
*Twenty specimens of different kinds of wood.*—
Toommedechava.
Teak.
Ratigoo.
Somee.
Veroogoodoochava.
Condatungadoo.
Pauchebulla.
Boodathummee.
Bundauroo.
Peda Vagesa.
Ippabulla.
Peddapalloo.
Tadybulla.
Muddy.
Diresena.
Bottooka.
Pegamanoo.
Jeedee.
Pucharoo.
Tappisa.
The trees of which these woods are specimens are, it is stated, found in considerable quantities in the forests of Ganapavarum, Nagavarum and Peda Copillallah Mootahs of the Taudimulla Talook, Rajahmundry District; they are situated within 30 miles of Yernagoodem, which is the Talook Cuspah station, and within about 42 miles of Niddavole, whence there is water communication to Nursapoor and Cocanada.

A. Purvis, Esq. Exhibitor.
18 Specimens of barks, dyes, &c.
19 Do. of gums, thirty-one.
Collected in the hill Talooks of the District.

N. C. Gopaulachary, Exhibitor.
25 Specimens of dyes and gums.
47 Do. of wood Pauchekurra.
48 Do. of Bundaurookurra.
49 Do. of Peda Vagesakurra.

F. N. Hawkins, Esq. Exhibitor.
17 Specimen of Iron from "Yamunpilly" a village on the right bank of the Praneeta, a tributary of the Godavery, about 20 miles from the junction, and 250 miles from Dowlaishwarum. The ore, which is said to be very abundant, is procured in the adjacent hills, and smelted with charcoal; the Iron sold, retail, at 1 Rupee ℔ maund of 25 lbs.
50 Kathemundoo—
used by Natives as a glue, or gum, obtained by boiling the milky juice of a tree called Kathemundoo chettoo—sample sent is produced from trees near Annavarum, a stage south of Toonee in this District.
The Hare Island on the Chilka Lake in Ganjam abounds with this tree.
51 Chamoodoo—
obtained by boiling milky juice of a tree called "Chamoodoo chettoo" *milk hedge.*
The Natives of Ganjam prefer it to the former, for fixing the handles of their wood-cutting knives, it being, they say, tougher and more durable. It is without the offensive smell of the Kathemundoo

# SALEM.

*Exhibition Nos. corresponding with those of Local Committee.*

| Local Committee No. | Progressive Exhibition No. |
|---|---|
| *Cloths.* | |
| 1 | 2392 |
| 2 | 2428 |
| 3 | 2397 |
| 4 | 2393 |
| 5 | 2394 |
| 6 | 2395 |
| 7 | 2396 |
| 8 | 2426 |
| 9 | 2427 |
| 10 | 2420 |
| 11 | 2421 |
| 12 | 2472 |
| 13 | 2473 |
| 14 | 2468 |
| 15 | 2469 |
| 16 | 2476 |
| 17 | 2477 |
| 18 | 2422 |
| 19 | 2423 |
| 20 | 2478 |
| 21 | 2479 |
| 22 | 2480 |
| 23 | 2481 |
| 24 | 2482 |
| 25 | 2483 |
| 26 | 2484 |
| 27 | 2485 |
| 28 | 2486 |
| 29 | 2487 |
| 30 | 2488 |
| 31 | 2489 |
| 32 | 2490 |
| 33 | 2491 |
| 34 | 2492 |
| *Silk.* | |
| 35 | 2443 |
| *Fibres.* | |
| 36 | 2447 |
| 37 | 2448 |
| 38 | 2459 |
| 39 | 2460 |
| 40 | 2461 |
| 41 | 2462 |
| *Sundries.* | |
| 42 | 2453 |
| 43 | 2454 |
| *Roots and Dyes.* | |
| 44 | 2455 |
| 45 | 2456 |
| 46 | 2457 |
| 47 | 2508 |
| 48 | 2509 |
| 49 | 2510 |
| 50 | 2511 |
| 51 | 2513 |
| 52 | 2514 |
| 53. | 2515 |
| 54 | 2516 |
| 55 | 2512 |
| 56 | 2458 |
| 57 | 2507 |
| 58 | 2507½ |
| 59 | 2517 |
| 60 | 2518 |
| 61 | 2519 |
| 62 | 2525 |
| 63 | 2526 |
| 64 | 2527 |
| 65 | 2528 |
| 66 | 2371 |
| 67 | 2372 |
| 68 | 2373 |
| 69 | 2374 |
| 70 | 2375 |
| 71 | 2376 |
| 72 | 2377 |
| 73 | 2378 |
| 74 | 2379 |
| 75 | 2380 |
| 76 | 2381 |
| 77 | 2382 |
| 78 | 2383 |
| 79 | 2384 |
| 80 | 2385 |
| 81 | 2386 |
| 82 | 2387 |
| 83 | 2388 |
| 84 | 2389 |
| 85 | 2390 |
| 86 | 2391 |
| 87 | 2393 |
| 88 | 2399 |
| 89 | 2400 |
| 90 | 2401 |
| 91 | 2402 |
| 92 | 2403 |
| 93 | 2404 |
| 94 | 2442 |
| 95 | 2405 |
| 96 | 2407 |
| 97 | 2408 |
| 98 | 2410 |
| 99 | 2416 |
| 100 | 2417 |
| 101 | 2424 |
| 102 | 2425 |
| 103 | 2406 |
| 104 | 2409 |
| 105 | 2411 |
| 106 | 2412 |
| 107 | 2413 |
| 108 | 2463 |
| 109 | 2464 |
| 110 | 2414 |
| 111 | 2415 |
| 112 | 2418 |

## SALEM.

*Exhibition Nos. corresponding with those of Local Committee.*

| Local Committee No. | Progressive Exhibition No. | Local Committee No. | Progressive Exhibition No. |
|---|---|---|---|
| 113 | 2419 | 158 | 2521 |
| 114 | 2430 | 159 | 2522 |
| 115 | 2430½ | 160 | 2524 |
| 116 | 2431 | 161 | 6847 |
| 117 | 2432 | 162 | 6848 |
| 118 | 2433 | 163 | 6849 |
| 119 | 2434 | 164 | 6850 |
| 120 | 2435 | 165 | 6854 |
| 121 | 2436 | 166 | 6854 |
| 122 | 2437 | 167 | 6856 |
| 123 | 2439 | 168 | 6853 |
| 124 | 2438 | 169 | 6855 |
| 125 | 2440 | 170 | 6857 |
| 126 | 2441 | 171 | 6858 |
| 127 | 2444 | 172 | 6859 |
| 128 | 2445 | 173 | 6860 |
| 129 | 2446 | 174 | 6861 |
| 130 | 2449 | 175 | 6861½ |
| 131 | 2450 | 176 | 6862 |
| 132 | 2451 | 177 | 6863 |
| 133 | 2452 | | |
| 134 | 2452½ | | |
| 135 | 2465 | | |
| 136 | 2466 | | |
| 137 | 2467 | | |
| 138 | 2468 | | |
| 139 | 2469 | | |
| 140 | 2421 | | |
| 141 | 2471 | | |
| 142 | 2493 | | |
| 143 | 2498 | | |
| 144 | 2499 | | |
| 145 | 2494 | | |
| 146 | 2523 | | |
| 147 | 2495 | | |
| 148 | 2500 | | |
| 149 | 2501 | | |
| 150 | 2502 | | |
| 151 | 2503 | | |
| 152 | 2504 | | |
| 153 | 2505 | | |
| 154 | 2496 | | |
| 155 | 2497 | | |
| 156 | 2506 | | |
| 157 | 2520 | | |

# SALEM.

THE LOCAL COMMITTEE, AT *Salem, Exhibitors.*

16
117 ibit

1 Woman's cloth (silk & lace border) Rs. 23-4.
2 Woman's cloth (Chendrakalay pattern) Rs. 8-2.
3 Woman's cloth (Nagamoody pattern) Rs. 22.
4 Chowkaly Handkerchief (silk) Rs. 5.
5 Man's cloth, with single Roodratchapetta border Rs. 11.
6 Man's cloth, with double Roodratchapetta border. Rs. 9.
7 Man's cloth, with double gold laced Roodratchapetta border. Rs. 32.
8 Man's cloth, with double blue Roodratchapetta border. R. 5-4.
9 Man's cloth, with single blue Roodratchapetta border. R. 5-4.
10 Specimens of Iron ore.
11 Chrome ore.
12 Iron Ore, 1st. Sort, As. 2.
13 Iron Ore, 2d. Sort, As. 1.
14 Specimen of smelted Iron. As. 5.
15 Specimen of smelted Iron. A. 5.
16 Iron Bloom, or Pallum. As. 3.
17 Iron Bloom, or Pallum. As. 3.
18 Iron Sickle. As. 2.
19 Bill Hook. As. 8.
20 Bucket. Rs. 7.
21 Axe. As. 12.
22 Weedor. As. 2.
23 Ploughshare. As. 6.
24 Ploughshare. As. 6.
25 Ploughshare. As. 6.
26 Ploughshare. As. 6.
27 Pacota Ring. Rs. 1-12.
28 Mamootee. Rs. 1-0-10.
29 Mamootee. Rs. 1-0-10.
30 Mamootee. Rs. 1-0-10.
31 Mamootee. Rs. 1-0-10.
32 Mamootee. Rs. 1-0-10.
33 Mamootee. Rs. 1-0-10.
34 Crowbar. Rs. 1-8.
35 Cocoons silk. As. 8.
36 Palmyra Fibre. Pie. 2.
37 Coco Fibre. Pie. 3.
38 Fibres from the Sherveroy Hills
39 Fibres Do.
40 Fibres Do.
41 Fibres Do.
42 Turmeric. As. 3-6.
43 Sugar, 1 maund. Rs. 1.
44 Nonah Root (dye) with a specimen of dyed cloth. As. 8.
45 Nonah Root powder (dye) As. 5.
46 Nonah Root powder (dye) Pi. 8.
47 Kuppelapody (dye) 5 seers. R. 1-12
48 Puppelichekay (dye) 5 seers. A. 6.
49 Muddecheka (dye) 5 seers. As. 4.
50 Malaypoo (dye) 5 seers. As. 8.
51 Kuppelapody in lump (dye) A. 1.
52 Puppelecheka powder (dye) A. 1.
53 Muddecheka powder (dye) A. 1.
54 8 Rolls of Cotton thread dyed once, twice, and so on, in Puppelicheka dye. As. 1.
55 Sealing wax. 5 seers, As. 4.
56 Causy leaves. Pie. 3.
57 Raw Silk, 1st. Sort 26 Tolahs. Rs. 2-8.
58 Raw Silk, 2d. Sort, 29¼ Tolahs. Rs. 2-7-6.
59 Yellow Silk, dyed with Kuppelapody. 2 Tolahs, As. 5-6.
60 Red Silk, dyed with avul arruk. Rs. 1-3.
61 Veppum, or Margosagum.
62 Uddakoopathrum, or 9 Brass utensils. Rs. 74-12.
63 12 Gunnies. Rs. 7.

64 3 Large Dubbers. Rs. 6-10.
65 3 Small Dubbers. Rs. 1-11.

ARNACHELLUM ACHARRY, *of Salem, Exhibitor.*

66 New Steel bench vice. Rs. 21.
67 „ Steel Pin vice. Rs. 5.
68 „ Mustard Drill with blades. Rs. 10
69 Do. Steel Gun spring vice. R. 3.
70 Do. 12 Inches long steel hunting knife, with Buck horn handle, & case with spring and leather strap, complete. Rs. 12.
71 8 Inches long Do. Do. Rs. 8.
72 7½ Do. long Do. Do. with Silver guard, and Silver mounting to the case, and leather Strop, complete. Rs. 15.
73 Steel clasp pocket hunting knife, with flying Spring. Rs. 12.
74 Steel clasp Hunting knife, with Instruments. Rs. 17-8.
75 Steel Ivory handle clasp Pen-knife. Rs. 3.
76 Steel Pocket Pen-knife, with two Screws to fasten reins together if they break. Rs. 7.
77 Steel Pruning knife. Rs. 2.
78 Steel carving knife and fork, with buck horn hadles. Rs. 9.
79 Large Steel clipper. Rs. 9.
80 Small Steel clipper. Rs. 7.
81 Do. and another Small Do. R. 4.
82 Do. flower Scissors. Rs. 2-8.
83 Do. Nut cutting knife, with silver mounting. Rs. 5.
84 Do. Hog Spear head. Rs. 3-8.
85 Do. Skinning knife, with buck horn handle. Rs. 5.
86 Do. Silver mounted Bread cutting knife. Rs. 6.

P. VENCATARAMA CHETTY, *of Salem, Exhibitor.*

87 Woman's silk cloth. Rs. 28-8.

P. SOOBAROYA CHETTY, *of Salem, Exhibitor.*

88 Man's cloth. Rs. 21.

C. NAGANDRA CHETTY, *of Salem, Exhibitor.*

89 Man's Silk cloth. Rs. 17-4.

C. SASHOY CHETTY, *of Salem, Exhibitor.*

90 Boy's cloth. Rs. 5-8.
91 Nine Specimens of Silk. Rs. 12.

CAUSY ROWT, *of Salem, Exhibitor.*

92 2 Tanned Sheep skins. 30 R. per hundred.
93 2 Tanned Goat skins. 60 Rs. per hundred.

Causy Rowt (continued.)

94 6 Skins of squirrels Rs. 9.

Chinniah Moodely, of Salem, Exhibitor.

95 Cotton Woman's cloth. Rs. 3-10.
96 Country Trowser's cloth. Rs. 2-8.
97 Dungery cloth. Rs. 2-4.
98 Cotton Carpet, Rs. 2-12.
99 Specimens of wheat. As. 9.
100 Very fine Rice. As. 10-8.
101 Fibres of aloe. As. 12.
102 Shrub fibres. Rs. 1.

Vencatrama Chetty, of Womalore, Exhibitor.

103 Man's cloth. Rs. 28.

VEERABUDRA CHETTY, *of Salem Exhibitor.*

104 Silk Rug. Rs. 12.

MISSION INDUSTRIAL SCHOOL *at Salem, Exhibitors.*

105 Palmyra box, Rs. 25.

HAFIZ MOHAMED *of Salem, Exhibitor.*

106 Mustard Oil.
107 Waxcandle, 1 £. Rs. 12.
108 Surgeon's Pocket case. Rs. 10.
109 Root, antidote for the bites of snakes.

ADALAKUM CHETTY, *of Salem, Exhibitor.*

110 Castor Oil, 1 bottle As. 12.
111 Castor Oil, 1 bottle As. 12.

TEROOVENGADA ODIAN, *of Salem, Exhibitor.*

112 Black wool, As. 2.

TONDROY NAIK, *of Salem, Exhibitor.*

113 Betel Nut, As. 10.

ANDEE VENCATACHELLAPATTY, *of Salem, Exhibitor.*

114 12 Napkins, Rs. 1.
115 Gown cloth, Rs. 2-4 for 12 yards.
116 Gown cloth, Rs. 2 for 12 yards.
117 Coat cloth, Rs. 2-4 for 12 yards.
118 Trowser's cloth. Rs. 3-8.
119 Trowser's cloth, R. 4-14 for 13 ys.
120 Coat, or Trowser's cloth, R. 2-8. for 12 yards.
121 2 Pick axes, Rs. 2 each.

TEROOMALA GOUNDEN, AND PALANY GOUNDEN, *of Salem, Exhibitor.*

122 Auttee Nar, As. 4.
123 Aloe Fibre, As. 12.

COOLIAH GOUNDEN, of Salem, Exhibitor.

124 yercum Nar, As. 2.

CONDALAMPUTTY CHETTY, of Salem, Exhibitor.

125 Hemp, As. 2.

CHOCKALINGA MOODELY, of Salem, Exhibitor.

126 Betel Nut, Rs. 1.

ANDEE SOOBBROYA CHETTY, of Salem, Exhibitor.

127 Lamp wick, Rs. 1.

RAMASAMY, of Salem, Exhibitor,
128 Poolachanar fibre, Pie 3.

MEER MOHAMED, of Salem, Exhibitor.

129 2 Lines for Fishing, Pie. 6 each.

BALASAMY CHETTY, of Razepoor, Exhibitor.

130 Man's cloth, Rs. 58-13.

SOONDRA MOODELY, of Razepoor, Exhibitor.

131 Woman's cloth, Rs. 22.
132 Woman's cloth, Rs. 14-4.

ARTHANARY MOODELY.

SABAPATTY MOODELY,

COOPPOO MOODELY,

CALYTHEETHA MOODELY, of Venunundoor, Exhibitors.

133 Salempoor cloth, } Rs. 6-8.
134 Salempoor cloth, }

Mr. CAUSAKER, of Salem, Exhibitor.

135 Gun, Rs. 60.
136 Gun used as a cane, Rs. 21.
137 Gun Lock, Rs. 10.
138 Spade and Pick, Rs. 4.
139 Iron Ore.
140 Chrome Ore.
141 White Clay.

RAJA NARASIAH CHETTY, of Oossoor, Exhibitor.

142 Silver Tray, Rs. 88.
143 Woman's cloth Chawkaly pattern, Rs. 13.
144 Spotted lace choley, or Woman's cloth Rs. 2-2.

P. SASHAGHERRY ROW, Tahsildar of Oossoor, Exhibitor.

145 Silver Cup with cover, Rs. 45-8.
146 Iron Ore.

COTHA SOOBBA CHETTY, of Oossoor, Exhibitor.

147 Red, Woman's Silk cloth, R. 33.
148 3 Choleys, or Woman's cloths. Rs. 6-12.
149 Head cloth (Nafurmany) 6¼ cubits square, Rs. 35.

150 Head cloth (Nafurmany) 5 cubits square, Rs. 24.
151 1 White Turban, Rs. 3-8
152 1 White Turban, Rs. 3-
153 1 Pair of Man's white cloths, 6 cubits each, Rs. 6-8.

NATHUNNA CHETTY, of Oossoor, Exhibitor.

154 Woman's red Silk cloth, Rs. 28.
155 Woman's cloth of Roomalay pattern cloth, Rs. 12-8.
156 Man's cloth with Lace border, 6 cubits, Rs. 6-8.

STREENEVASSA CHETTY, of Salyvarum, Exhibitor.

157 Two Sandal wood pieces.
158 Sandal Oil.

HEERAY GOUNDEN, of Yella Samoothrum, Exhibitor.

159 Areca Nuts.

APOTHECARY R. HUFFTON, Exhibitor.

160
1 Aloes, Pice. 6.
2 Baelfruit.
3 Bonduck Nut, Pice. 2.
4 Catechu, As. 1.
5 Clearing Nut, Pice. 8.
6 Colocynth, or Bitter Cucumber, seed, Pice. 9.
7 Country Ipecacuanha.
8 Country Sarsaparilla, As. 1-4.
9 Chiretta, Pice. 6.
10 Dhak kino, As. 1-4.
11 Different kinds of galls, As. 1-2.
12 Dikkamalay gum, Pice. 6.
13 Galanga Root, Pice. 8.
14 Hydrocotyle Asiatica.
15 Indian Leadwort.
16 Country Hemp Seed and leaves.
17 Indian Birthwort, As. 1.
18 Nux Vomica.
19 Opium, As. 4.
20 Prickly Poppy Seed.
21 Rosebay Seed, Pice. 6.
22 Senna leaves, Pice. 6.
23 Sweet Flag, Pice. 8.
24 Thorn Apple Seed.
25 Croton Seed.
26 Pharbitis Nil-in Latin Kala Dana in Hindoostance, As. 1.
27 Blistering Betel.
28 Ram Til, Pice. 8.
29 Poppy Seed, As. 1-8.

Messrs. FISCHER and Co. Exhibitors.

161
1 Bourbon Cotton, 5 Maunds.
2 Oopum Do. Do. 5 Maunds.
3 Ladum Do. Do. 5 Maunds.
4 Nankeen Do. Do. 5 Maunds.
5 Coffee, large berry, 5 Maunds.
6 Coffee, pea berry 5 Maunds.
7 Sumach, 2 Maunds.
8 Saltpetre, 5 Maunds.
9 Corundum, 1 Maunds.
10 Janapan Nar.
11 Janapan Rope.
12 Pulachee Nar.
13 Pulachee Rope.
14 Yercum Nar.
15 Yercum Rope.
16 Munja Nar.
17 Munja Rope.

R. Hurry Row, Exhibitor.

WET GRAINS.

CAR SERIES.

4280 Ananthadycoorooway As. 1-10
4281 Aurayan As. 1-11
4282 Auroovathancoday As. 1-8
4283 Aroovathanalcoorooway As. 1-7
4284 Annathanacoorooway As. 2-2
4285 Coshurcoothalay As. 2-2
4286 Curoovaulum As. 1-11
4287 Coorooncorooway As. 1-8
4288 Car As. 2.
4289 Cautaluvannan As. 1-11
4290 Calaverayen As. 1-11
4291 Coothalay As 1-11
4292 Cooroovicar As 1-10
4293 Coombacooroovicar As 1-2
4294 Caroothacaduppoo As 1-11
4295 Cuduppacaloonday As 1-8
4296 Cauttooppoovanaun As 1-½
4297 Coorooncar As. 1-9
4298 Cadapoocar As. 1 9
4299 Chittaracar As. 1-11
4300 Chittriyan As. 2-7
4301 Kuttycar As. 1-10
4302 Muttaycoorooway As. 1-9
4303 Manavaurycudapoo As. 1-7
4304 Muttaycooroowaycar As. 1-9
4305 Muttaycar As 1-10
4306 Parooncar As. 1-11
4307 Singingy As. 1-11
4308 Shencar As. 1-3½
4309 Shengalanicar As. 1-11
4310 Shooracoorooway As. 1-11
4311 Shaguppoocoothalay As. 1-9
4312 Sheeloovacaduppoo As. 1-10
4313 Shendicar As. 1-1
4314 Vellaycoorooway As. 1-11
4315 Vooshycoottalay As. 1-8
4316 Vellacaduppoo As. 1-10
4317 Vellacoothaulay As. 1-11
4318 Vellacar As. 1-9
4319 Vellashundicar As. 2
4320 Vellacooroowaycay As. 1-2½
4321 Yellungar As. 1-9½

SUMBA PISHANUM SERIES.

4322 Attiyoorsumbah As. 1-8
4323 America do. As. 2-1
4324 Ananthan do. As. 2-1
4325 Allagiahvanan As. 1-5
4326 Bengal Sumbah As. 2-5
4327 Coorooway Moolagy As. 2-1
4328 Carthica Sumbah As. 2-3
4329 Cadacaloottan As. 2-1
4330 Carooppoopishanum As. 1-9
4331 Cooncooma Sumbah As. 2
4332 Cumbun Sumbah As. 2-2
4333 Caroothay caloonday As. 1-11
4334 Calloonday As. 2
4335 Codoovalay As. 2
4336 Colladichan As. 2
4337 Cattoor Sumbah As. 2
4338 Caushy do. As. 1-9
4339 Cautoo calloonday As. 1-5
4340 Coombalay As. 1-9
4341 Earooccoo Sumbah As. 2-2
4342 Eeangemoottan As. 11
4343 Garoodan Sumbah As. 2
4344 Jeergha do. As. 2-3
4345 Kyver. do. As. 2-½
4346 Kingenimalay As. 1 11
4347 Kristnaleelah As. 2-1
4348 Moothoo Sumbah As. 2-1
4349 Moollagoo do As. 2
4350 Ottadun As. 2-1
4351 Panamoharan As. 1-11
4352 Poottoo Sumbah As. 2-1
4353 Putna Sumbah As. 1-9
4354 Pooshpa do. As. 2-2
4355 Palany do. As. 1-9½
4356 Poombalay As. 2
4357 Pishanum As. 2
4358 Paroonjeekunny As. 1-½
4359 Peroommoolaghy As. 2
4360 Ponga Sumbah As. 2
4361 Paulcadoocoy As. 1-11
4362 Ramanathen Sumbah As. 1-10
4363 Sharapalay do. As. 2
4364 Shagapoosheroomonien As. 2-1
4365 Shivan Sumbah As. 2-3
4366 Shumbeliperian As. 2-1
4367 Segappoo Sumbah As. 2-1
4368 Sookhadoss do. As. 2-3
4369 Shumbaulay As. 2-½
4370 Shaday Sumbah As. 2 1
4371 Shagappoomoolagy As. 2-2
4372 Thillanayacun As. 2-½
4373 Thoovara Sumbah As. 2-1
4374 Vallachercomonien As. 2-1
4375 Vengoo Sumbah As. 2
4376 Vellamoolaghy As. 2-2
4377 Vellay Sumbah As. 2 2
4378 Venthia Sumbah As. 2-2
4379 Vaudan Sumbah As. 2-3
4380 Vaushanay do. As. 2-3
4381 Voosee do As. 2-3
4382 Yogul As. 1-1
4383 Auryan As. 1-8
4384 Annathana Coorooway As. 1 4
4385 Coshoocoothaulay As. 1-11
4386 Caroovalan As. 1-6
4386½ Caroom coorooway As. 1-5
4387 Car As. 1-7.
4388 Cattalayvaunun As. 1-7

4389 Culararayen AS. 4.
4390 Coothaulay AS 1 11.
4391 Caroothacaduppoo AS 1-7.
4392 Caduppracalconday AS 1-10.
4393 Corooncar AS 1-7.
4394 Caduppoocar AS 1-5.
4395 Chittracar AS 1-8.
4396 Chittrayan AS 1-9.
4397 Muttacoorooway AS 1-3.
4398 Mannavarycaduppoo AS 1-6.
4399 Muttaycoorooway car AS 1-5.
4400 Parooncar AS 1-7.
4401 Singny AS 1-2.
4402 Shengalanicar AS 1-8.
4403 Shooracoorooway AS 1-3.
4404 Shagappoocoottalay AS 1-6.
4405 Sheelavaycaduppoo AS 1-3.
4406 Shendicar AS 1-6.
4407 Vellaycoorooway AS 1-7.
4408 Vooseecoothalay P 9.
4409 Vellacaduppoo AS 1-6.
4410 Vellashundicar AS 2-1.
4411 Yelluncar AS 1 6.
4412 Attnyoor Sumbah AS 1-6.
4413 Anuntha do. AS 1-9
4414 Aulagheyavanun AS 1.
4415 Cooroovaymoolaygy AS 2-2.
4416 Cadacaloothan AS 2-1.
4417 Carooppupishanum AS 1-2.
4418 Cooncooma Sumbah AS 1-8.
4419 Caroóthacalloonday P. 9.
4420 Coombaulay AS 1-6.
4421 Codoovalay AS 1-8.
4422 Collidichan AS 1-2.
4423 Cauttoo Sumbah AS 1-1.
4424 Earangoomoottan AS 1-4.
4425 Garoodun Sumbah AS 1-8.
4426 Kyver do. AS 2-1
4427 Kinginymalay AS 1-3.
4428 Kristnaleilah AS 1-8.
4429 Moottoo Sumbah AS 2-2.
4430 Molaghoo Sumbah AS 1-11.
4431 Ottadun AS 2-1.
4432 Panamobaran AS 1-8.
4433 Poottoo Sumbah AS 1-8.
4434 Patna do. AS 1-6.
4435 Pooshpa do. AS 1-9.
4436 Poombaulay AS 1-11.
4437 Pishanum AS 2.
4438 Paroommooloogbey AS 1-8.
4439 Ponga Sumbah AS 2.
4440 Paulcadoocoy P. 10.
4441 Ramanathen Sumbah AS 1-4.
4442 Sarapaly do. AS 1-7
4443 Shaguppoo Sharoomaniun AS 2.
4444 Shumbaliperien AS 1-8.
4445 Shaguppoo Sumbah AS 1-9.
4446 Shaday do. AS 1-10
4447 Shaguppoomoolaghy AS 1-10.
4448 Thillanayagum AS 1-9.
4449 Vengoo Sumbah AS 1-8.
4450 Vellamoolaghy AS 1-10.
4451 Vellaycar AS 2-5.
4452 America Sumbah As 2-7.
4453 Bengal do As 2-9.
4454 Carthica do As 2 8.
4455 Cumbum. do As 2-7.
4456 Calloonday As 2-5½.
4457 Caushy Shumbah As 3 5.
4458 Earccoo do As 2 7.
4459 Jeergha do. As 2-8.
4460 Palany do As 2-6.
4461 Shevan do AS 2-8.
4462 Sookdoss do AS 2-8.
4463 Shumbaulay do AS 2-6.
4464 Thovaray do AS 2-6.
4465 Vellay Seroomonyen AS 2-6.
4466 Vellay Sumbah AS 2-7.
4467 Venthia Sumbah AS 2 7.
4468 Vaudah Sumbah AS 2 8.
4469 Vaushanny Sumbah AS 2-8.
4470 Vooshy Sumbah AS 2-8.

### DRY GRAINS.

4471 Linseed AS 4 4.
4472 Yellumveragoo AS 2-3.
4473 Paroomveragoo AS 2-3.
4474 Varagoo AS 2-3.
4475 Shenchollum AS 2-3.
4476 Vellachollum AS 2-3.
4477 Caudaycunny AS 2-3.
4478 Erungoo AS 2 3.
4479 Thenay AS 2-3.
4480 Shaguppoo Thenay AS 2-3.
4481 Raggy AS 2-2.
4482 Cumboo AS 2-3.
4483 Coorooway Cumboo AS 2-3.
4484 Cathady Cumboo AS 2-3.
4485 Sawmay AS 2-3.
4486 Peroomsawmay AS 2-3.
4487 Sheloovasawmay 2-3.
4488 Kootherayvauly AS 2 5.
4489 Naihooroovee (Achryanthes aspera.) AS 2-4.
4490 Vedithicottay AS 2-6.
4491 Cooncoomapier AS 2-8.
4492 Vayapier AS 2 6.
4493 Aumanaccoocottay AS 2-6.
4494 Chittamanaccoocottay AS 3.
4495 Shencleray AS 26.
4496 Naucadaghoo AS 2-5.
4497 Caudarumbum yelloo AS 2 6.
4498 Prickly poppy seed AS 2-7.
4499 Poppy seed AS 3.
4500 Indian corn or Maize AS 2-4.
4501 Bangalore Maize AS 2 3.
4502 White do. AS 2-3.
4503 Red do. AS 2-3.
4504 Black do. AS 2-3.
4505 Venthiem Fenngrech AS 2-10.
4506 Cadooghoo AS 3.
4507 Bengal Gram AS 2-10.
4508 Purging nut AS 2 5.
4509 Neem seed AS 2-2.

4510 Thovaray pulse AS 2-8.
4511 Tobacco seed AS 5.
4512 Gram AS 2-5.
4513 Paroompayer AS 2-5.
4514 Coothoocaramany AS 25.
4515 Thovaray AS 2-5.
4516 Mochacottay AS 2-6.
4517 Puchapier AS 2-6.
4518 Coriander AS 2-2.
4519 Noonavaray AS 2-6.
4520 Roselle seed AS 2-6.
4521 Thattay pier AS 2-5.
4522 Arrott seed AS 10.
4523 Pillaressy AS 3.
4524 Woollunthoo AS 2-8.
4525 Betel nut AS 4-7.
4526 1st sort Chayroot cultivated AS 7.
4527 2nd sort do. do AS 5-3.
4528 3rd sort do. do AS 5.
4529 Do Wild AS 1-4.
4530 Morinda AS 10.
4531 Vatharaneum Tobacco AS 7.
4532 Podooghay do AS 4.
4533 2nd sort do. do AS 3-6.
4534 Thomson's Muster Cheroot AS 4.
4535 Cheroots AS 3.
4536 Long do AS 5.
4537 Small do AS 3-4.
4538 American Cotton AS 2.
4539 Golconda Cotton without seeds AS 3-3.
4540 Do. do. with seeds AS 9.
4541 Voopum do. do AS 4-4.
4542 Do. do. without seeds AS 3.
4543 Landum do. with seeds AS 3-8.
4544 Do. do. without seeds AS 5-6.
4545 Saday cotton without seeds AS 1-3.
4546 Plantain meal AS 5.
4547 Arrowroot AS 7.
4548 Saltpetre Rs 5-2.
4549 Salt purified AS 7.

### Oils.

4550 Oil Roosoom AS 4-9.
4551 Do. Kajee Rs 1-6.
4552 Do. Linseed AS 1-4.
4553 Do. Purging AS 5.
4554 Do. Gingelly AS 4-6.
4555 Do. do AS 4-10.
4556 Do. hemp seed Rs 1-10.
4557 Do. Prickly poppy AS 6.
4558 Do. Poon seed AS 5-6.
4559 Do. Mustard AS 9.
4560 Do. Poppy seed AS 11-6.
4561 Do. Cocoanut AS 5.
4562 Do. do AS 5-7
4563 Do. Ground nut AS 4.
4564 Do. Pumpkin seed AS 14.
4565 Do. Illoopoo AS 5.
4566 Do. Kurrury AS 9.
4567 Do. Neem AS 4-6.
4568 Do. Castor AS 6.
4569 Do. Cucumber seed AS 15.
4570 Oil Raddish seed Rs 1-9.
4571 Do. Saray puppoo Rs 1-15
4572 Do. Rosell seed AS 15.
4573 Do. Melon seed Rs 1-3-5.
4574 Do. Almond do. Rs 2-13.
4575 Do. Pulas do. AS 15.
4576 Do. Neeradimobttoo do. AS 15.
4577 Soap nut Rs 2 15.
4578 Bael seed AS 11.
4579 White cotton do. AS 6.
4580 Ghee AS 1.
4581 Bishops weed do. Rs 7-11.
4582 Tobacco do. Rs 3-3.
4583 Mamusops do. Rs 1-3.
4584 Wood apple do. Rs 1-4-4.
4585 Sweet fennel do. Rs 3-9.
4586 Hairy momordica do. AS 11.
4587 Bondue nut do. AS 14.
4588 Bishops weed do. Rs 1 10.
4588½ Camphor do. Rs 1-14.
4589 Cuminum do. Rs 7 2.
4590 Anise do. Rs 1-6.
4591 Cloves do. AS 12.
4592 Pepper do. Rs 1-10.
4593 Fennel flower do. Rs 1-14.
4594 Coriander Rs 1-14.
4595 Lemon Grass Rs 1-4.

### Carpets.

4596 Iempettah large woollen carpet 23 5 16 7 Rs 200.
4597 Iempetta small woollen carpet 8 5 x 4 3 Rs 16.
4598 Do. do do 8 2 x 4 1. Rs 15.
4599 Do. do silk do 7 6 x 3 7 Rs. 1 .
4600 Do. do do do 7 6 x 3 5 Rs 15.
4601 Do. do coir do Rs 1 8.

### Sheally Mats.

4602 Mats. Rs. 1-8.
4602⅓ Do. Rs. 1-8.
4603 Do. Rs 1-8.
4603⅔ Do. Rs 1-8.
4604 Do. Rs 1 12.

### Jewellery.

4605 One silver staple pattern chain Rs 9.
4606 Do. do do do. Rs 9.

### Fibres and Ropes.

4607 Plantain fibre. Rs. 1 14.
4608 One Inch do. do. rope in circumference Rs. 1 3 8.
4609 ¾ Do. do. do. do As 10 6.
4610 ½ Do. do. do. do AS 5.
4611 ⅜ Do. do. do. do As 3-2.
4612 Do. purple coloured fibre AS 4 6.
4613 Marool Sunseviera Zefanica fibre Rs. 1 2 6.
4614 Marool fibre rope ¾ Inch in circumference Rs. 1 3.

4615 ½ Inch do. do. do As 11 4.
4616 ¼ Inch do. do. do As 11.
4617 ¾ Inch do. do. do As 5 5.
4618 Marool purple coloured fibre As 10-3.
4619 Do. Green do. do. P. 9.
4620 Do. Purple do. rope As. 1-9
4621 Aloe American fibre Rs 1-8
4622 Do. Green coloured do. Rs. 1-2
4623 Do. Purple do. do. As. 10-8.
4624 Do. Rope 1 Inch Rs. 1-4-4
4625 Do. do ⅞ Inch As. 11-10
4626 Do do ¾ do. As. 10 6
4627 Do. do ½ do. As. 4
4628 Do. purple coloured rope As. 15
4629 Do. Green do. do. As. 8
4630 Pine Apple (Bromelia ananass or sativa fibre) As. 5-5
4631 Do Rope ⅜ Inch Rs. 2-5-10
4632 Yerucum Fibre As. 11-3
4633 Do Rope ¼ Inch Rs. 1 2-7
4634 Janapa Rope 1 Inch As. 6-8
4635 Janapa Rope ⅞ Inch As. 5
4636 Janapa Rope ¼ Inch As. 2
4637 Janapa Rope ½ Inch As. 1-10
4638 Cotton Rope 1 Inch Rs. 1-7-1
4639 Cotton Rope ⅞ Inch As. 12-2
4640 Cotton Rope ¾ Inch As. 7-4
4641 Cotton Rope ⅝ Inch As. 6-11
4642 Cotton Rope ½ Inch As. 3-3
4643 Coir fibre As. 4-3
4344 Coir Rope 1 Inch Rs. 1-2-8
4645 Coir Rope 1 Inch As. 6-2
4646 Coir Rope ¾ Inch As. 7-5
4647 Coir Rope ½ Inch As. 5-7
4648 Coir Rope ⅜ Inch As. 1.
4649 Benda Fibre Ab elmoschusencutus As. 2-6.
4650 A pair of Buffaloes Horns Rs. 3.
4651 A pair of Bullocks Horns Rs. 1-8.
4652 One stag hide R. 1.
4652½ One stag hide R. 1.
4652¼ 1st sort Cotton Yarns Rs. 3 9.
4652¾ 2nd sort Cotton Yarns Rs. 1-9.

BANGALORE COLOURED SILK YARNS.

4653 Nimbo Rs. 2-3-6.
4654 Green Rs. 3-5-2.
4655 Purple Rs. 3-6-1.
4656 Saffron Rs. 2-12.
4657 Black Rs. 3-6-1.
4658 Red Rs. 3-5-2.
4659 White Rs. 3-10-9.
4660 Onion coloured Rs. 3-8.

BENGAL COLOURED SILK YARNS.

4661 Red Rs. 3-2-5
4662 Saffron Rs. 2-13
4663 Nimboly Rs. 2-12
4664 Green Rs. 2-2.
4665 Black Rs. 2-14-7
4666 White Rs. 3 1
4667 Purple Rs. 3-6-2

SILK CLOTHS.

4668 Woman Cloth Rs. 21
4669 Woman Cloth Rs. 18-14
4670 Woman Cloth Rs. 19-6
4671 8 Cholies Rs. 10
4672 8 Cholies Rs. 9.
4673 8 Cholies Rs. 8.
4674 Four Cholies Rs. 4-4.
4675 Two Cholies Rs. 2 2.
4676 One Cholies R. 1.
4677 White Silk Cloth 5½ Yards 6 Inches Rs. 28-12.
4678 Silk Cloth 1¾ Yards Rs. 4.
4679 Silk Cloth 9½ Yards Rs. 21
4680 Four Iempettah Silk handkerchiefs Rs. 8.

SILK AND COTTON MIXED CLOTHS.

4681 Cornad Woman Cloth Rs. 45.
4682 Combaconum Cloth Rs. 18.
4683 Do 8 Cholies Rs. 4.
4684 Do 3 do Rs-3-9.
4685 Do 3 do Rs. 2-10.
4686 Do 2 do Rs. 1-8.
4687 Do do 2 do Rs. 1-12.
4688 Tanjore 6 Cholies Rs. 4-14.
4688½ Do 2 do Rs. 2-1-

COTTON CLOTHS.

4689 Two Pair of Man Cloth Rs. 11-8.
4690 Two Do do do Rs. 9-8.
4691 Two Do of Angostrum Rs. 7-4.
4692 Nine Yards Shalow Rs. 4-8.
4693 Fifteen ½ Do Iyawady Cotton Cloth Rs. 4-11.
4694 Nine Do do do do Rs. 3-12-9.
4695 Nine Do bleached do do Rs. 4-2.
4696 Fifteen Do of Combaconum Cotton Cloths Rs. 3.

FIBRE CLOTHS.

4697 Marool White Cloth Four Yards (sansebeirazeylonica) Rs. 21-11-7.
4698 Do Green do 1¼ Yards do Rs. 6-14-2.
4699 Do Brown do 1½ do do Rs. 5 14-11
4700 Aloe white Cloth Four Yards. Aloeamericane.
4701 Do Green do 1½ Yards do Rs. 7-4-6.
4702 Do Brown do 1⅛ Yards do Rs. 6-13.
4703 Pine apple cloth Four Yards Rs. 29 10.
4704 Do do do 3 do Rs. 22-3-7.
4705 Do do Yellow do Rs. 8-7-2.
4706 Do do handkerchiefs Rs. 6-5-.
4707 Yercum cloth 1¾ Yards Rs. 13-7.
4708 Plantain 2 handkerchiefs Rs. 3-4.
4709 Do Brown Coloured Cloth 1 Yards Rs. 2-8.
4710 Cap and Plate made by Paddy R 1¼

WOOD CUPS.

4711 Sandal wood cup Rs. 1.
4712 Coatyaloomichamarum Rs. 1.
4713 Allinjeemarum As. 10.
4714 Vodiyamarum As. 12.
4715 Yettimarum As. 10.
4716 Koyamarum As. 8.
4717 Cattoo Agethemarum As. 9.
4718 Maroothanaymarum As. 8.
4719 Veermarum As. 11.

## Hurry Row, Exhibitor.

PAPER.

4720 Punthanellore Paper made by yercum Fibres 2 quires As. 10
4721 Do do Rose coloured 2 quires As. 12
4722 Do do Brown do 1 do As. 4
4723 Brown paper made by Plantain fibres 3 quires As. 7-6
4724 Do do Large size do 3 do As. 12

## G. T. Beauchamp Esq., Exhibitor.

5077 A Piece of cloth showing the various stages or processes by which it is made into chintz Rs. 6-14
5078 A packet containing the several articles used in preparing the chintzes.
5079 9 musters of chintz handkerchiefs Rs. 3-4 6.
5080 213 patterns of chintzes Rs. 2
5081 A Packet containing 2 markers

## A. Pradhomme, Esq. Exhibitor.

5082 Bottle of Cocoanut Oil
5083 Do of Gingely seed
5084 Do of Caster or Lamp
5085 Do of Eloopai
5086 Do of Pinnay
5087 Do of Ground nut
5088 Do of Margosa
5089 Bishops weed seed.
5090 Pure Elooppai soap bars 10.
5091 Gunny bag prepared with sanappa fibres.
5092 Sample of Cotton thread dyed red.

## W. D. Kohlhoff, Esquire, Exhibitor.

5093 8 Soap Bars.
5094 Saltpetre.
5095 Specimen of hard clay of Toolajapatam.
5096 Do. Tanned Sheep Skins.
5097 Do. Goat do.
5098 Do Kid do.
5099 Cocoanut oil.
5100 Gingely seed oil.
5101 Ground nut oil.
5102 Elooppai oil.
5103 Pinnay oil.
5104 Caster oil.
5105 Margosa oil.
5106 Cajon nut oil.
5107 Wood oil.
5108 Jamaica Yellow Thistle seed oil.
5109 Physic nut.
5110 Mustard oil.
5111 Dry leaf Indigo.
5112 Arrowroot.

## Goondappa Row, Exhibitor.

5113 A specimen of Vellam stone.
5114 Triciniopoly Marble stone paper weight.
5115 A pair of black spotted shells of Ramasuwaram.
5116 A chequered shell of do.
5117 A sandal wood fan.

## T. Kistna Row, Exhibitor

5118 White quartz found about the Vennar head.
5119 A specimen of Clay found in Boodalore in the Trivady Talook.
5120 Do. of hard clay like slate found Gundracottah.
5121 One Goglet (Earthen) As. 4-8.
5122 One do Double moulded(Earthen.) As. 4-8.
5123 Yerookum or Calatropis Gigantea, Fibres weighing 10 seers.
5124 A fishing net made of the above fibres.
5125 Ankoos or Elephant whip made at Tanjore Rs. 15.
5126 A pair of white sullahs or men's cloth with laced aprons each 8 yards long prepared at Arthanghy. Rs. 8-14.
5127 Black plain femalecloth 9 yards long prepared in Tanjore Rs. 9-3.
5128 Do. do. with silver Edge Rs. 7-7.
5129 A model of Palankeen prepared at Tanjore (Pithwork) Rs. 35.
5130 A serpant made of horse hair at Tanjore Rs. 2.

## Lutchmana Row, Exhibitor.

5131 Gold lace 15 3-16 Pagodah 3-16 weight Rs 14-3-6.

## Modeen Saib, Exhibitor.

5132 Gold lace 40 Pagoda weight Rs. 37-8

## Peer Saib, Exhibitor.

5133 Gold lace 20 Pagoda weight Rs. 18-12.

## Gopoo Soobryaloo Chettiar, Exhibitor.

5134 Metal plate and Tumbler Rs. 4-1
5135 Metal plate and Tumbler Rs. 3-13 3
5136 Do. Rs. 2-15-6.
5137 Do. Rs. 2-13.
5138 Do. Rs. 3-14-6.
5139 Do. Rs. 3-14-6.
5140 Do. Tumbler with handle Rs. 1-7-9.
5141 Copper plate Rs. 2-1.
5142 Do. Rs. 2-1.
5143 Copper cups and saucer Rs. 2-16.
5144 Do. Rs. 2-14-3.
5145 Do. Rs. 2 3.
5146 Do. Rs. 2 Pie 6.
5147 Metal water Glass Rs. 2-3.
5148 Metal water glass Rs. 2-3.
5149 Silk scarf white with lace Rs. 15-8.
5150 Do. red with do. Rs. 15-8.
5151 Do. blue with do. Rs. 15-8.
5152 Do. Rose colour without lace Rs. 14.
5153 Silk handkerchief red and blue colour Rs. 5-4.
5154 Do. Green and blue colours Rs. 5-4.
5155 Do. Green and yellow do Rs. 5-4.
5156 Do. yellow and lilac do. Rs. 5-4.
5157 Do. with lace red and yellow Rs. 7-8.
5157½ Do. do. red and rose Rs. 7-8.
5158 Do blue and yellow colours Rs. 5-4.
5159 A piece of silk cloth 8 yards yellow colour Rs. 33-12.

## Ramoo Pillay, Exhibitor.

5160 7 tanned leathers coloured Rs. 4-7.
5161 6 Tanned leathers not coloured Rs. 2-14
5162 A tin box containing camphor saveeram Rasacurpoorum and Rasasendooram Rs. 13-9-3.

## Thavasia Pillay, Exhibitor.

5163 8 tanned leathers coloured Rs. 5.
5164 9 Tanned leathers not coloured Rs. 4 3.
5165 A tin box containing camphor Rasacurpooram Rasasendoorum Saveeram and soap Rs. 10 15-7.

## Fakeersah, Exhibitor.

5166 Coir Rope As. 12.
5167 Do. As. 8.
5168 Do. As. 5.
5169 Do. Rope made of Maroo ol fibres Rs. 1
5170 Do. Dyed black As. 4.

## Kistnapah Naick, Exhibitor.

5171 A picture of the Rajah of Tanjore Pithwork Rs. 20.
5172 A pair of tank Digger and his wife Pithwork Rs 5.
5173 A pair of Gauzoolman and his wife Pithwork Rs. 5.

## Local Committee Exhibitors.

5174 Silk carpet Rs. 23-11-9.
5175 Do. do Rs. 23-11-9.
5176 Do. do Rs. 23 11-9.
5177 Officers silk sashes (6) Rs. 48.
5178 1 Piece Ladies silk dress Rs. 50.
5179 2 Silk neckerchieves Rs. 6-8.
5180 English Bell Rs. 10.
5181 Specimen of the mud in the Cavary Padoogai in the Trivady Talook.
5182 Do. Do. in the Codamoorootty Padoogai in do. Talook.
5183 Do. do. in the Vettaur Padoogai in do. Talook.
5184 Do. do. in the Colleroom Padoogai in the Sheally Talook.
5185 Noonah roots which yield red dye.
5186 Vembadamputtay used for the same dye.
5187 Dry leaves of Cattsaum a well known jungle plant used for the same dye.
5188 Ashes of certain Vegetable substances used for the same dye.
5189 Specimen of light purple chalk (raw) procurable at Vullam.
5190 Do. of white chalk (raw) do. do.
5191 Do. do. prepared.
5192 Steel Scissors.

## W. M. Cadell Esquire, Exhibitor.

5193 A model of the Lower Colleroon ancient south branch and bridge.

## Mr. C. W. Maitland, Exhibitor.

5193½ Model of Locks and Drains on the Munnyaur River in the District of Tanjore.

# TINNEVELLY.

Sunkarasoobien, Exhibitor.

PADDY.

101 Aunycomben.

---

Soobramonçya Pillay, Exhibitor.

102 Caudy calottan Paddy.

---

Sunkarasoobein, Exhibitor.

103 Mutta vally Paddy.

---

Maharaja Pillay, Exhibitor.

104 Manulvaree Paddy.
105 Vellarikeravee. do.
106 Cooroovycalyan. do.
107 Thooyamully. do.

---

Thurmapermal Pillay, Exhibitor,

108 Vellysumbah Paddy.
109 Sumbah. do.

---

Maharaja Pillay, Ehibitor.

110 Custoory Sumbah Paddy.

---

DRY GRAINS.

Nullaseven Pillay, Exhibitor.

111 Caipy or Raggy.

---

Meeras Soobaroyer, Exhibitor.

112 Cockoi cholum.
113 Cumboo or Spiked millet.
114 Varugoo
115 Bengal Gram.
116 Sawmie.

---

Nullaseven Pillay, Exhibitor.

117 Black Gram.

---

Meeras Soobaroyer, Ehibitor.

118 Horse Gram.

---

Sodalamoottoo Pillay, Exhibitor.

119 Mochycottai or Buller.
120 Peroompayaroo or Big Gram.

---

Nullaseven Pillay, Exhibitor.

121 Green Gram.

Ramen, Exhibitor.

122 Rape Seed.

Nullaseven Pillay, Exhibitor.

123 Caster Oil Seed.

---

Ganapathy Sastry, Exhibitor.

124 Senna Seed of European variety produce in Tinnevelly District.

---

Samcovien, Exhibitor.

125 Senna leaves Exotic.

---

Maharajah Pillay, Exhibitor.

126 Turmeric Fibres.

---

Valun Chetty, Exhibitor.

127 Gunny piece made of Janapa fibre 5 cubits long As. 3-4.
128 Junapa or Indian hemp fibre.
129 Rope made of Do.

---

Madasawmy, Exhibitor.

130 Rope made of Palmira fibre.

---

Weaver Mootoosawmy, Exhibitor.

131 Cotton thread.

---

Sooben, Exhibitor.

132 Winnowing baskets made of Palmirah Stalk.

---

Nullaseven Pillay, Exhibitor.

133 Churka.

---

Daivanaigum Iyengar, Exhibitor.

134 Artificial Brinjal.
135 Do. Pomgranate.
136 Do. Cucumber.

---

Moottumbalavanum, Exhibitor.

137 An Image of Goddess made of Copper Rs. 2.

---

CARPENTERS.

Pichen, Arnachellum, Soodalamootoo, Exhibitors.

138 A Wooden Image of Kristnen in a creeping posture R. 1.

# TINNEVELLY.

GOLDSMITHS.

Moondroomoogumcondan, Palavasum, Comarasawmy, and Sevasoobramoneyen, Exhibitors.

139 Small Silver plate on which the figure of Lutchmy is engraved As. 12.

Mareapathen, Thurmalingaputhen, Exhibitors.

140 A Doll engraved on a small Silver Plate Rs. 1.

FISHERMEN.

Cullamoottoo, Soodalamootoo, Palavasum, and Sungaralingum, Exhibitors.

141 Thoovee or a kind of snare made of Stalk of Cocoanut leaves Rs. 1.
142 Cutchal or a kind of basket for fish made of Do. As. 12.
143 Fishing net Rs. 3.

Teroovangadum, Coolunthavaloo, Alagheyanumbee, and Sawmy Exhibitors.

144 Two papers containing different specimens of dyes on the borders of cloths and on Handkerchieves used by natives As. 2-6.

Meeranjee Meah Saib, Exhibitor.

145 Horns of Bison with skull covered with skin R. 1 As. 8.
146 Skin of Do. As. 8.
147 Horns of Do. with skull, Rs. 1-8.
148 Elk horns with skull covered with skin R. 1.
149 Elk skin As. 8.

Nullamoden, (Hunter) Exhibitor.

150 Elk skin As. 8.

Meeranjee Meah Saib, Exhibitor.

151 Ibex horns with skull covered with skin R. 1-8.
152 Ibex skin As. 8.
153 Stags horns with skull covered with skin R. 1.
154 Stags skin As. 8.
155 Spotted deer's horn with skin As. 8.

Shan Iyapen, Exhibitor.

156 Deer skin As. 2.

Meeranjee Meah Saib, Exhibitor.

157 Wild Boar's skull with tusks As. 4

Pitchen, (Hunter) Exhibitor.

158 Boar skin As. 4.

Meeranjee Meah Saib, Exhibitor.

159 Jackall's skin stuffed and set up As. 4.
160 Black Monkey's skin stuffed and set up As. 8.
161 Hill squirrels skin stuffedand set up As. 8.
162 Flying squirrel stuffed and set up As. 8.
163 Hedge Hog stuffed and set up As. 3.
164 Hill Tortoise Shells As. 2.
165 A Kind of Tortoise with a beautiful Shell As. 4.
166 Fish bone As. 2.
167 Red Sand.
168 Black Do.
169 Large Grains of white sand.

## TRANQUEBAR.

### Hamlin Nott Esq., Civil Surgeon, Exhibitor.

FIBRES.

6958 Aloe Fibre.
6959 Aloe Fibre.
6960 Plantain Fibre.
6961 Ficus Religiosa or Arsa Nar.
6961½ Ficus Religiosa or Arsa Nar.
6962 Rope of sizes prepared from the fibre of the Aloe perfoliata.
6963 Rope prepared from the fibre of the Ficus Religious.
6964 Rope prepared from the fibre of Musa Paradisiaca or Plantain.
6965 Soap prepared at Tranquebar.
6966 Arrow root.

## Local Committee, Exhibitors.

### MINERALS AND METALLIC SUBSTANCES.

3138 Iron Sand.
3139 Iron Stone.
3140 Iron Stone another sort.
3141 Iron Slag.
3142 Iron slag another sort.
3143 Plumbago.
3144 Plumbago stone and sand.
3145 Plumbago sand.
3146 Iron made from stone.
3147 Iron made from sand.
3148 Quartz cleared.
3149 Quartz uncleared.
3150 Mineral Dammer from earth.
3151 Red Ochre.
3152 Yellow Ochre.
3153 Charcoal dug from Verkullay.
3154 Do. do. 2d sort.
3155 Charcoal.
3156 Sulphate of Iron, As. 2-3
3157 Do.
3158 Do.
3159 Mica.

### Implements.

3160 Cape Comorin red sand.
3161 Do. black sand.

### Materials employed in Architecture and Engineering, &c.

3162 Potters clay.
3163 Black clay.
3164 White clay.
3165 Another kind of White clay from Verkullay.
3166 A species of red Ochre from do.
3167 A species of yellow Ochre do.
3168 Limestone.
3169 Lime from stone.
3170 Iron bloom.
3171 Granite.
3172 Granite smoothed.
3173 Do. do.
3174 White Granite.
3175 White Granite smoothed.
3176 Dark white Granite.
3177 Do. do. smoothed.
3178 Black Granite.
3179 Do. do. smoothed.
3180 Green Granite.
3181 Narricul.
3182 Narricul smoothed.
3183 Hard white stone.
3184 do. smoothed.
3185 Ferruginous sand stone.

### Vegetable Kingdom.

3186 Fenugreek As. 2-2.
3187 Chilly Pice 5.
3188 Do.
3189 Coriander.
3190 Garlick, As. 2-1.
3191 Cloves As. 6-4.
3192 Turmeric long As. 1-7.
3193 Turmeric round As. 1-7.
3194 Dry Ginger As. 1.
3195 Cardamoms
3196 Cardamom seed Rs. 2-4.
3197 Mustard As. 2-5.
3198 Bird Chillies As. 1-8.
3199 Coffee As. 5-7.
3200 Mace As. 10-4.
3201 Cinnamon.
3202 Cinnamon (Country) Pie 3.
3203 Pepper long Pie 7.
3204 Areca Nut.
3205 Areca Nut sliced.
3206 Do.
3207 Areca Nut sliced and coloured.
3208 Nutmeg.
3209 Pepper black.
3210 Pepper white.

### Grains Pulses, &c.

3211 Varoochamoonda Paddy.
3212 Karooppookaly do.
3213 Do. do.
3214 Varee do.
3215 Chumba. do.
3216 Veetheemadungen do.
3217 Chen do.
3218 Kuttay Chumba do.
3219 Mottakooroova do.
3220 Kookkiriparapilapen do.
3221 Navara do.
3222 Courtallam do.
3223 Anay komben do.
3224 Kooroova do.
3225 Vareecola chumba do.
3226 Coolavala do.
3227 Varicoli chumba rice boiled and dried.
3228 Do. Do. raw.
3229 Navara rice boiled and dried.
3230 Do. raw.
3231 Varee rice boiled and dried.
3232 Do. raw.
3233 Chumba rice boiled and dried.
3234 Do. raw.
3235 Moolagi rice boiled and dried.
3236 Vellachumba do.
3237 Koorootta chumba do.
3238 Table rice.
3239 Panangooroova paddy.
3240 Areekaravee do.
3241 Vellei Arcekaravee do.
3242 Vellei chumba do.
3243 Keerivella do.
3244 Green Gram.
3245 Pig gram.
3246 Do. another sort.
3247 Horse Gram.
3248 Marsh.
3249 Pigeon pea.
3250 Buller.
3251 Bengal Gram.
3252 Chamay.
3253 Chamay.
3254 Raggy.
3255 Raggy another sort.
3256 Great Millet.
3257 Ear of Italian Millet.
3258 Italian Millet.
3259 Spiked Millet.

3260 Common Millet.
3261 Sago.
3262 Gingelly seed.
3263 Choonday vuttel.
3264 Mooroooceen vuttel.
3265 Aroola vuttel.
3266 Arrow sort.
3267 Arrow root prepared.
3268 Do. another root.
3269 Indian Sago.
3270 Tapioca sliced.
3271 Do. prepared.
3272 Round yam.
3273 Round yam starched.
3274 Chalanga.
3275 Chalanga sliced.
3276 Pidikilangoo.
3277 Seevakilangoo.
3278 Lilly seed.
3279 Common Millet.
3280 Yams seed.
3281 Saembankilango.
3282 Casheu Nut.
3283 Yams.

---

## Assistant Surgeon E. G. Waring, Aranger, Exhibitor.

MEDICINAL SUBSTANCES.

3284 Wood Turmeric.
3285 Meringee.
3286 Margosa Bark.
3287 Samutira palam.
3288 Gall Nut.
3289 Caradamom seeds.
3290 Koomutikai.
3291 Konnaykai.
3292 Valambrikai.
3293 Clearing Nut.
3294 Marking Nut.
3295 Bonduc Nut.
3296 Ink Nut.
3297 Chempaga Buds.
3298 Kodukkapooly.
3299 Nellikai.
3300 Caatoo seeragum.
3301 Veppalarisee.
3302 Castor Oil seed.
3303 Croton seed.
3304 Pollacooroovoo.
3305 Yettikottay.
3306 Kutcholum.
3307 Sweet flag root.
3308 Vaelam pisin.
3309 Væpon pisin.
3310 Mooroonga pisin.
3311 Thennum pisin.

---

## T. Madava Row, Dewan Peishkar, Exhibitor.

3312 Vuttathamarah pisin.

---

## Assistant Surgeon E. Waring, Arranger, Exhibitor.

3313 Oaderie Vaengei pisin.
3314 Carrawah puttay.
3315 Sandal wood.
3316 Red Sandal wood.
3317 Cuss Cuss
3318 Athithirpili.
3319 Cheruthaik.
3320 Charrunay vayr.
3321 Poorasam Virei.
3322 Pinnay Poo.
3323 Thirpili, Moolum.
3324 Thalisaputhree.
3325 Amookkoorum.
3326 Turkolum.
3327 Karavaelum puttay.
3328 Chevium.
3329 Karkadasingoo.
3330 Cooroovilla Kadookkai.
3331 Galingal.

---

## Local Committee, Exhibitors.

3332 Elanthacooroo.
3333 Karinjotteecooroo.
3334 Maravetticooroo.
3335 Erroovœli.
3336 Vetty vayr.
3337 Vaempaudumputtay.
3338 Pelamunjell.
3339 Chembon Nerinjie.
3340 Kundumkathree.
3341 Thoothoovilei.
3342 Emboora vayr.
3343 Tiroomalay Konnay.
3344 Chouttoo Konnay.
3345 Cheelaunthiputtay.
3346 Manjanauthputtay.
3347 Chappungoo.
3348 Chaya Vayr.
3349 Indigo.
3350 Veloothacoonycooroo.
3351 Sivanthacoonycooroo.
3352 Manjaudycooroo.
3353 Cheeyakai.
3354 Thanikai.
3355 Peenaurumputtay.
3356 Auvauray vayr.
3357 Pannee vayr.
3358 Karoovalum vayr.
3359 Koomil vayr.
3360 Senthatty vayr.
3361 Kolinjei vayr.
3362 Vishamoongilkilangoo.
3363 Karinjoora vayr.
3364 Seenthokodee.
3365 Pauretta vayr.
3366 Cooroonthotty vayr.
3367 Erookkala vayr.
3368 Koarankilangoo.
3369 Causoocutty or Catcheu.
3370 Thyvaula vayr.
3371 Peroomthoomba vayr.
3372 Notchy vayr.
3373 Nunnaury vayr.
3374 Aroogaukilangoo.
3375 Koopamaenee.
3376 Esangoo vayr.
3377 Codaovaily vayr.
3378 Poongum vayr.
3379 Vaughaputtay.

### Fibers and fibrous Manufacture.

3380 Pine apple fibre.
3381 Vellathoulay Naar.

3382 Aalam Naar.
3383 Kuttaulay do.
3384 Oday do.
3385 Marul do.
3386 Erookala do.
3387 Moorooca do.
3388 Cul Aalum do.
3389 Kyven do.
3390 Chadamboo or Indian Hemp.
3391 Vuccoo or Indian another kind.
3392 Sago palm tree fibre.
3393 Paraövully.
3394 Paulvully.
3395 Areiauyinithol.
3396 Cotton.
3397 Moorooccoo Cayer.
3398 Mogara.
3399 Aritta Cayer.
3400 Koyven fibre Canvas.
*3401* *Bags made of do.*
*3402* *Blank book made of Thallee kadjan.*
*3403* *Do.*
*3404* *Do.*
*3405* *Indian Hemp twine.*
*3406* *Thallipot palm leaves.*
3407 Do.

---

## General Cullen, Exhibitor.

GUMS.

3408 Gutta Parcha.
3409 Do. do.
3410 Do. do.
3411 Do. do.

---

## Captain W. Gilby, Exhibitor.

OIL SERIES.

3412 Lemon grass oil.

---

## C. Sawmynadah Moodelly Marahmut Sheristadar, Exhibitor.

3413 Cadal Amanakoo oil.

---

## Local Committee, Exhibitors.

3414 Wood Oil.
3415 Earth do.
3416 Poonga do.
3417 Margosa do.
3418 Karinjotta do.
3419 Maravetta do.
3420 Poovenga do.
3421 Elooppa do.

### Resins.

2422 Dammer.

### Animal Kingdom Substances used as food.

3423 Honey.
3424 Do.

### Substances for Medicinal purposes.

3425 Turtle Oil.
3426 Fish do.
3427 Caricheemala Nai.
3428 Muthy Nai.
3429 Chera Nai.
3430 Chalai Nai.
3431 Terachee Nai.
3432 Bees wax.

### Substances used in Manufacture.

3433 Flying squirrel.
3434 Flying lizards.
3435 Stuffed Birds.

### Machinery.

3436 Colored bow of Areca Nuts.
3437 Bow string.
3438 Motoo Umboo
3439 Oosee Umboo.

### Manufactures, Fabrics spun and woven from Cotton.

3440 Cotton thread (Yarn).
3441 1st Sort Cloth worn by Nairs.
3442 Long cloth unbleached.

### Embroidery.

3443 1st Sort Gold thread.
3444 2d Sort do. do.
3445 Silver thread.
3446 Gold wire.
3447 Silver wire.
3448 Gold twisted wire.
3449 Silver twisted wire.
3450 Gold sunnathagadoo.
3451 Silver do.
3452 Ponnoo Jimiky.
3453 Vellee Jimiky.

### Lace from Quilon.

3454 Lace As. 11-6.
3455 Do. Rs. 1.
3456 Do. Rs. 1.
3457 Do.
3458 Do. Rs. 1.
3459 Do.
3460 Do. As. 14.
3461 Do. As. 11-6.
3462 Do.
3463 Do. Rs. 1.
3464 Do. As. 10-6.
3465 Do. As. 10-6.
3466 Do.
3467 Do.
3468 Do. As. 10-6.
3469 Do. Rs. 1.
3470 Do. Rs. 1.
3471 Do.

### Manufactures from rags and fibre and similar Vegetable Substances.

3472 Demy size paper As. 12.
3473 Cartridge paper As. 12.
3474 Medicine paper Rs. 1-8.
3475 China paper As. 6.

---

## Gopaul Sate Madavon Congany, Goldsmith, Quilon, Exhibitor.

MANUFACTURES IN METAL. SILVER ARTICLES.

3476 Bracelets in Silver Rs. 11.
3477 Rootheratchum bracelets Rs. 8.

3478 Shawl pins Silver Rs. 2-4.
3479 Rootheratchum shawl pins Rs. 1-8.
3480 Large silver broach Rs. 5.
3481 Small do. Rs. 3-8.
3482 Small do. Rs. 3.
3483 Butterfly do. Rs. 1-12.

T. Madava Row Dewan, Peishkar, Exhibitor.

3484 Filigree Bouquet holder.
3485 Do. Chain or Necklace.
3486 Silver Chain.

T. Kristno Row Dewan, Exhibitor.

3487 Carved Cocoanut shell mounted with silver.
3488 Filigree Card case of silver.

Golden Article.

3489 Golden Broach.

Local Committee, Exhibitor.

BELL METAL ARTICLES.

3490 Cups Rs. 2.
3491 Tumbler Rs. 2.
3492 Large table bell with a figure Rs. 6.
3493 Middle size bell Rs. 3.
3494 Small size bell Rs. 1-12.
3495 Sandal Cup Rs. 1-12.
3496 Table knives Rs. 7.
3497 Scissors Rs. 1.
3498 Metallic pen, knife and an hole driller Rs. 2-12.
3499 Sword Rs. 7.
3500 Bullock bells Rs. 1-8.
3501 Toy (Aseivooree) Rs. 1-12.
3502 Tobacco As. 8.

T. Madava Row Dewan, Peishkar, Exhibitor.

3503 Metallic Miror.

P. Shungoony Menoven, 1st Police Sheristadar, Exhibitor.

3504 Hour cup.

C. Sawmynadah Moodelly, Exhibitor.

3505 Table lamp. Rs. 18-8.

Local Committee, Exhibitors.

IRON ARTICLES.

3506 A set of writing Implements consisting of an iron penknife and an hole driller inlaid with gold. Rs. 4 4 2.
3507 Do. do. Rs 2 12 2.
3508 Table knife.
3509 Areca nut cutter.

T. Madava Row, Peishkar, Exhibitor.

MANUFACTURES IN EARTHENWARE AND POTTERY.

3510 Goglets of kinds.
3511 Tea kettles of do.
3512 Pints of kinds.
3513 Incense pot.
3514 Measure of kinds.
3515 Cup.
3516 Saucers of kinds.
3517 Glasses of do.
3518 Baking Chuttee.

Local Committee, Exhibitor.

3519 Spitton.
3520 Bottles.

Implements.

3521 Grind stone made of lac.

T. Madava Row, Exhibitor.

3522 Whetstone.

Kristna Row, Dewan, Exhibitor.

WOODEN ARTICLES.

3523 Redwood walking stick ivory headed.
3524 Redwood rulers inlaid with ivory.

Local Committee, Exhibitors.

MODELS.

3525 Native palankeen.
3526 Fishing boat.
3527 His Highness' Car.
3528 Water wheel.
3529 Cottayam shape Boat with 3 adah Numboo and Caloccoal for rowing.
3530 Choonden boat with 43 Tholah adah and Numboo for rowing.
3531 Small Vunjee Boat with 19 thandoo and rudder.
3532 Panna Chooroolum Oady Boat with 8 Thola and aday.
3533 Vudacceen Oady boat with 9 vuttoo puncoyem.
3534 Choorool and Paroondoovaul boat with 7 tholah aday and numboo.
3535 Oady shape of boat with 3 Tholah.
3536 Sea boat with 6 Thundoos and Pancoyem.
3537 Cargo boat with 5 thundoo and Pancoyem.
3538 Cuttoo Vullum boat with 3 thundoo Pancoyem
3539 Mats of Pundanas leaf.
3540 Do. do. Coloured.
3541 Grass Mat.
3542 Do. Coloured.
3543 Mat grass.
3544 Do. Coloured.
3545 Fans of palmyra leaf decorated with Nica.

T. Madava Row, Exhibitor.

3546 Mats of Pandanus leaf, coloured.

## Local Committee, Exhibitors.

3547 Vythalinkai.

### Ivory Articles.

3548 Elephant Rs. 12.
3549 Camel Rs. 10.
3550 Cow and Bullock Rs. 24.
3551 Royal Tiger Rs. 18.
3552 Deer and Stag Rs. 18.
3553 Antelope Rs. 14.
3554 Wild Boar Rs. 16.
3555 Goat Rs. 14.
3556 Dog and Bitch Rs. 16.
3557 Fox Rs. 10.
3558 Hares Rs. 10.
3559 Boy and Snake Rs. 20.
3560 Snake (Coiled) Rs. 20.
3561 Paper Cutter (alligator shape handle) Rs. 8.
3562 Do. Boy shape handle Rs. 8.
3563 Do. Flower shape handle Rs. 8.
3564 Do. Snake shape handle Rs. 8.
3565 Hand with pen Rs. 7.
3566 Hand with flower Rs. 7.
3567 Lotus red Rs. 14.
3568 Do. white Rs. 14.
3569 Allecpoo white Rs. 6.
3570 Do. red Rs. 6.
3571 Flowers with leaves Rs. 20.
3572 Brinjall long Rs. 2
3573 Do. blue Rs. 1-8.
3574 Pavakai Rs. 1.
3575 Vendakai Rs. 1.
3576 Pechenkai Rs. 2-8.
3577 Vella choondakai Rs. 1.
3578 Mango Rs. 1-8.
3579 Kaffree chilly Rs. 2.
3580 Country chilly As. 8.
3581 Papoodalenkai As. 8.
3582 Poloocca Paccoo Rs. 1.
3583 Jamboo navel fruit Rs. 1.
3584 Avarakai As. 8.
3585 Birds of different kinds Rs. 90.
3586 Turner and his assistant Rs. 38.
3587 Doctor and patient Rs. 35.
Insect (Thattan Pootzee Rs. 5.
3588 Sawer and assistant Rs. 25.
3589 Butterfly and Insect Rs. 6.
3590 Husbandman and Tiger Rs. 15.
3591 Ants and flies Rs. 7.

### Horn Articles.

3592 Snakes of Bison Horn Rs. 6.
3593 Lizards of do. Rs. 1-8.
3594 Crab, Snakes, Fly, Spider, Cockroaches, &c. &c., Rs. 26.
3595 Sago and Meal from an heart of Tallipot palm tree &c.
3596 White salt.

---

## C. Sawmynadah Moodelly, Marahmut Sheristadar, Exhibitor.

3597 Kulpaul or milk burst from the Rocks.
3598 Kulmadum.
3599 Catecheu.

## General Cullen, Exhibitor.

3600 Wheat, &c.
3601 Ivory figure.

---

## Binny and Co., Exhibitors.

3602 Cinnamon.
3603 Spices, &c. &c.
3604 Lemon grass oil.
3605 Coffee.
3606 Nutmegs and Mace.

---

## Local Committee, Exhibitors.

3607 Sago and Meal from an heart of Tallipot palm tree.

---

## P. Shungoony Menoven, 1st Police Sheristadar, Exhibitor.

PADDY.

| | | |
|---|---|---|
| 3608 | Velootha Aree | Paddy. |
| 3609 | Eakkali Chumba | do. |
| 3610 | Canavuttan | do. |
| 3611 | Varee | do. |
| 3612 | Mala | do. |
| 3613 | Seeraga Chumba | do. |
| 3614 | Coova | do. |
| 3615 | Kootticooroova | do. |
| 3616 | Varkoadee | do. |
| 3617 | Vallia Chittany | do. |
| 3618 | Chettipokkaulee | do. |
| 3619 | Vallaloa | do. |
| 3620 | Kooroothachootty arien | do. |
| 3621 | Toonipauvoo | do. |
| 3622 | Paundy | do. |
| 3623 | Ponnaurien | do. |
| 3624 | Chambavoo. | do. |
| 3625 | Velloothe Cannen | do. |
| 3626 | Charay | do. |
| 3627 | Chengaladee | do. |
| 3628 | Moondaga | do. |
| 3629 | Vellapokkaree | do. |
| 3630 | Velloothakodian | do. |
| 3631 | Toolookadauvoo | do. |
| 3632 | Eroomakalee | do. |
| 3633 | Velloothachootee arien | do. |
| 3634 | Malay arien | do. |
| 3635 | Naendirapallee | do. |
| 3636 | Arien | do. |
| 3637 | Injavara | do. |
| 3638 | Chen | do. |
| 3639 | Vaulee | do. |
| 3640 | Veloothakoorooga | do. |
| 3641 | Aneiksaden | do. |
| 3642 | Koorooga | do. |
| 3643 | Cheroo Chittanee | do. |
| 3644 | Karangauree | do. |
| 3645 | Chettee Vireepoo | do. |
| 3646 | Pokkauly. | do. |
| 3647 | Cheroomalay arien | do. |
| 3648 | Cheroo valla | do. |
| 3649 | Kada Vittoo | do. |
| 3650 | Peenikooroova | do. |
| 3651 | Coomondakuttala | do. |
| 3652 | Eanjakaden | do. |
| 3653 | Cooripa | do. |
| 3654 | Panangooroova | do. |
| 3655 | Aneikomben | do. |

| | | |
|---|---|---|
| 3656 | Chootty arien | paddy. |
| 3657 | Karoovindu | do. |
| 3658 | Eanjakaden | do. |
| 3659 | Coopasambavoo | do. |
| 3660 | Carippookkali | do. |
| 3661 | Mayilpokkali | do. |
| 3662 | Sooty arien and Karoomoonden | do. |
| 3663 | Vellay Chootty arien | do. |
| 3664 | Sitterakkalee | do. |
| 3665 | Sambavoo | do. |
| 3666 | Veedemadangen | do. |
| 3667 | Couttalam | do. |
| 3668 | Vellachambavoo | do. |
| 3669 | Mottakooroova | do. |
| 3670 | Velasiramoondugun | do. |
| 3671 | Seragasambavoo | do. |
| 3672 | Kootukoonippen | do. |
| 3673 | Navara | do. |

## Local Committee, Exhibitors.

3674 Illustrations of the Fassiliferous character of the Building stone called Laterite.

## Moothoosawmy Pillay, Exhibitor.

3801 Model of Sudder Bungalow Rs. 150.
3802 Water Machine.

## Comaravaloo Pillay, Exhibitor.

3803 Model of Open Court House Rs. 40.

## Ramah Vurmah, 3d Prince of Travancore.

4279 2 Reflectors.

# TRICHINOPOLY.

## Local Committee, Exhibitors.

### Skins.

| | | |
|---|---|---|
| 170 | Tiger Skin. .. .. .. | Rs. 7. |
| 171 | Cheetah Skin. ... ... .. | Rs. 4. |
| 172 | do. .. .. .. .. | Rs. 4. |
| 173 | do. ... .. .. .. | Rs. 4-8. |
| 174 | do. .. .. .. ... | Rs. 7. |
| 175 | do. .. ... ... | Rs. 6. |
| 176 | do. ... ... ... ... | Rs. 6. |

## Thayoomana Pillay, Exhibitor.

### Grains.

| | |
|---|---|
| 177 | Paddy in the ear. |
| 178 | do do. |
| 179 | do do. |
| 180 | do do. |
| 181 | do do. |
| 182 | do do. |
| 183 | do do. |
| 184 | A Sample of Paddy |
| 185 | do. do. do |
| 186 | Black cholum stalk |
| 187 | do. |
| 188 | do. |
| 189 | do. |
| 190 | 5 pieces of Pith. |
| 190½ | 5 Samples of Grain in the ear. |

## Veerasawmy Naick, Exhibitor.

### Figures illustrative of different Castes.

| | | | | |
|---|---|---|---|---|
| 3957 | Man of bearer caste woman of | do | do | Rs. 5. |
| 3958 | Man of Patan caste woman of | do | do | Rs. 5. |
| 3959 | Man of Lalla caste woman of | do | do | Rs. 5. |
| 3960 | Cook and wife | do | do | Rs. 5. |
| 3961 | Mahommedan Sheik wife of | do | do | Rs. 5. |
| 3962 | Sheik or Singh wife of | do | do | Rs. 5. |
| 3963 | Rajpoot wife of | do | do | Rs. 5. |
| 3964 | Snake charmer wife of | do | do | Rs. 5. |
| 3965 | Parsee | | | Rs. 2-8. |
| 3966 | Turk | | | Rs. 2-8. |
| 3967 | Man of Maharatta caste wife of | do | do | Rs. 5. |
| 3968 | Officers butler wife of | do | or Ayah child do | Rs. 5. |
| 3969 | Tailor wife of | | do | Rs. 5. |
| 3970 | Malayalum bramin man—1 woman and 2 children | | | Rs. 3. |
| 3971 | Moghul man and wife | | | Rs. 3. |
| 3972 | Woddurs or tank diggers 1 man 1 woman 2 children | | | Rs. 3. |
| 3973 | Hookah Burdar and wife | | | Rs. 3. |
| 3974 | Bird catchers 1 man 1 woman 2 children | | | Rs. 3. |
| 3975 | Pylewans—1 man—1 women 2 children | | | Rs. 3. |
| 3976 | Bangle merchant—wife and children | | | Rs. 3. |
| 3977 | Barber wife, and child | | | Rs. 3. |
| 3678 | Googerat man, woman and child | | | Rs. 3. |
| 3979 | Moghul merchant | | | Rs. 3 |
| 3980 | Fuckeer and wife | | | Rs. 3. |
| 3981 | Pith Figures of the Rajah of Mysore and 2 Ministers | | | Rs. 24 8. |
| 3682 | Model of Scotch Kirk, Madras | | | Rs. 21. |

## Vellore Arsenal Workmen, Exhibitor.

### Miners Tools.

5194 Bars Iron Furnace.
5195 Tamping brass.
5196 Borers with steel points large and small.
5197 Bits troy miners.
5198 Drags with worm.
5199 Gads steel.
5200 Hammers hand boarding.
5201 Do. do. Loading.
5202 Do Sledge country.
5203 Jumpers iron.
5204 Poles pick.
5205 Scoops spoon iron 2 feet.
5206 Shovels iron sappers and miners.
5207 Tompions flat at both ends.
5208 Wedges medling miners 11 Inch.
5209 Do. do. do. 13 Inch.
5210 Wire priming copper.
5211 Helves for hammers loading.
5212 Do. do. do. Boarding.
5213 Do. do. do. Sledge.
5214 Do. do. do. Poles pick.
5215 Do. do. do. Bits troy.
5216 Do. do. do. Shovels.
5217 Mallets wooden small.

### Intrenching Tools.

5218 Axes pick 10 lb. country.
5219 Do. do. 8 do.
5220 Do. Felling country.
5221 Do. Broad.
5222 Hammers for breaking stones with handle small.
5223 Hooks bill country.
5224 Helves for Axes pick.
5225 do. do. Mamoties.
5226 do. do. Axes felling.
5227 do. do. do. Broad.
5228 Mamoties 10 lb. country.
5229 do. 8 do. do. do.
5230 do. 6 do do. do.
5231 do. 5 do. do. do.

### Armourers Tools.

5232 Bows drill.
5233 Hammers wrench.
5234 do. Revitting with helves.
5235 Plyers cutting.
5236 do. common.
5237 Stocks drill with drills.
5238 Vices bench iron country.
5239 do. hand do. do.

### Carpenters Tools.

5240 Augurs iron Carpenters $1\frac{1}{4}$ inch.
5241 Axes hand with helve country.
5242 Braces carpenters with 25 bits.
5243 Chissels carpenter firmer $1\frac{1}{4}$ inch.
5244 do. do. do. 1 inch.
5245 do. do. Socket $1\frac{1}{4}$ inch.
5246 do. do. do. $\frac{3}{8}$ inch.
5247 do. do. Mortice $\frac{3}{5}$ inch.
5248 do. do. do. 1-11 do.
5249 Compass iron calibre pair.
5250 do. do. carpenters common.
5251 Gauge carpenter country.
5252 Hammers claw.
5253 Iron planes smoothing 2-18.
5254 Planes do.
5255 Squares carpenters 12 inch with steel blades.
5256 do. do. 6 do.
5257 Saws Tenant or fuze.
5258 Guages carpenter country common.

### Sundries.

5259 Locks Pad with Keys iron single $3\frac{1}{2}$ inch.
5260 Scissors pair.
8854 Adze Iron carpenters country.
8855 Saw bow armourers.
8856 Chissels Tumer Firmer.
8857 Do. do. do.
8858 Goujes carpenters Socket.
8859 Do. do. do.
8860 Do. do. Turner.
8861 Do. do. do.
8862 Knives laboratory small.
8863 Pincers iron.
8864 Spikes shove common.
8865 Spades country E. P.
8866 Gravers Turners.

Sedashia, Exhibitor.

8801 Backgammon Board Ivory and Tortoise shell Rs. 116.
8802 Ivory Box, Desk Jewel Box and work Box Rs. 127.
8803 Ivory Jewel Box Rs. 63-8.
8804 Ivory Jewel Box Rs. 63-8.
8805 Ivory Work Box Rs. 52-8.
8806 Ivory Work Box plain Rs. 52-8.
8807 Ivory Work Box fluted Rs. 58.
8808 Ivory Work Box fluted Rs. 58.
8809 Ivory Writing Desk with 2 secret drawers, large, Rs. 63.
8810 Ivory Writing Desk small Rs. 52.
8811 Ivory Basket Rs. 31-8.
8812 Ivory Basket Rs. 31-8.
8813 Ivory knitting Box Rs. 16.
8814 Sandal wood Writing Desk with 2 secret drawers, large Rs. 24.
8815 Sandal wood Writing Desk small Rs. 37.
8816 Sandal wood Work Box Rs. 32.
8817 Sandal wood Work Box Rs. 32.
8818 Sandal wood knitting Box Rs. 7-8.
8819 Elk Horn Writing Desk with 2 secret drawers, Rs. 42.
8820 Elk Horn Writing Desk, envelope complete Rs. 42.
8821 Elk Horn Work Box Rs. 40.
8822 Elk Horn Work Box Rs. 40
8823 Elk Horn Tea caddy large, Rs. 37.
8824 Elk Horn Tea caddy large, Rs, 37.
8825 Elk Horn Tea caddy small, Rs. 23-8
8826 Elk Horn Tea caddy small, Rs. 23-8
8827 Elk Horn envelope case, large Rs. 21
8828 Elk Horn envelope case, large Rs. 21
8829 Elk Horn envelope case, small Rs. 15.
8830 Elk Horn envelope case, small Rs. 13.
8831 Elk Horn Inkstand Rs. 21.
8832 Elk Horn knitting Box Rs. 7-8
8833 Tortoise shell knitting Box Rs. 17.
8834 Porcupine Quill knitting Box Rs. 6-8
8835 Ivory and Buffalo Horn envelope case Rs. 21.
8836 Buffalo Horn envelope case Rs. 11.
8837 Buffalo Horn knitting Box, large Rs 11.
8838 Buffalo Horn knitting Box, with tray Rs. 6-8.
8839 Buffalo Horn knitting Box Rs. 5-8.

---

F. Cooper, Esq., Exhibitor.

8840 Six Palmyra leaf Umbrellas.
8841 Six do do Basket Buckets.
8842 One Oripa a Mili Umbrella.

---

J. H. Blackwell, Esq. Exhibitor.

8843 Elk Horn Flower Stand.

# VIZIANAGRAM.

His Highness the Rajah of Vizianagram.

Exhibitor.

## Native Cloths.

815 Upper cloth 'scarff' with laceBorder of Bodasaram flower in 3 rows and with a lace fringe Rs. 34-13-1.

816 Do Lahery Vazrakanee and Soond-amanee bordered with lace Rs. 42-13-7.

817 Do red Bodasarum in 4 flowers Rs. 26-14-10.

818 Do Bungal flowers and Soondramanee bordered with lace Rs. 23-1-7.

819 Puncha and upper cloth bordered with Vazarakanee upper cloth Rs. 14-15-11. } Rs. 26-11-9.
Puncha Rs. 11-11-10. }

820 A piece of cloth As. 10.
821 A piece of cloth As. 10.
822 Do do As. 10.
823 Do do As. 12.
824 Do do As. 12.
825 Do do As. 10.
826 Vazrakanny roomal 5 yards. Rs. 14-10 3.

## Baskets, Hats, and other things made of Jayeekara.

827 Round hat Rs. 1.
828 Riding hat As. 10.
829 Hat As. 12.
830 Bonnet Rs. 1-4.
831 Flower basket As. 8.
832 Round do As. 12.
833 Do do Rs. 1.
834 Do do As. 8.
835 Work basket As. 6.
836 Round do As. 12.
837 Do do As. 10.
838 Do flower do As. 8.
839 Square box As. 3.
840 Long basket As. 10.
841 Punka Rs. 1-4.
842 Ladies fan As. 8.
843 Pedestal mat As 6.
844 Small mat As. 3.
845 Do do As. 2.

## Minerals.

846 Brimstone.
847 Carapa stone.
848 Red stone.
849 Granets or Cuncur.
850 Mangenees or Soorma.
851 Moordar Soonghee.
852 Plumbago.
853 Red Stone.
854 Granet Stone.
855 Cooroovindum stone or clean Iron
856 Chilamanee stone.
857 Sooda stone.
858 Iron stone.
859 Brown and Groen soodda.
860 Seclanjet.
861 Black stone.
862 Myca.
863 Lime Stone.
864 Pucha jagooroo.
865 Raute bundoo.
866 Black Myca.
867 Iron Ores.
868 Granets rose coloured.
869 Lime Stone.
870 Rock Crystal.
871 Parcilian clay.
872 Glass stone.
873 Myca stone.
874 Black stone.
875 Purple coloured stone.
876 Horn stone.
877 Black Glass stone.
878 Tree Coormum Mud.
879 Granet stone.
880 Tadeepak soorma.
881 Black stone.
882 Glass stones or Bangle stone
883 Cheepooroopullay stone.
884 Another kind of glass stone.
885 Shoorl.
886 Another kind of lime stone.
887 Chowdoovada plumbago.
888 Sooda stone.
889 Gaujoorajee.
890 Davarapully Chalk.
891 Flint stone.

## Wooden Caskets.

892 Caskets coloured with sealing wax from No. 1 to 30 Rs. 4-5-9.

## Ointments.

| | | | |
|---|---|---|---|
| 893 | Broongaraja tilem per | seer | Rs. 8. |
| 894 | Lanskadee tilem | do. | Rs. 6. |
| 895 | Navanada sidda tilem | do. | Rs. 5. |
| 896 | Narain tilem | do. | Rs. 7. |
| 897 | Servanga tilem | do. | Rs. 10 |
| 898 | Veshamoosti tilem | do. | Rs. 8. |
| 899 | Vantarashasa tilem | do. | Rs. 8. |
| 900 | Taumara tilem | do. | Rs. 4. |
| 901 | Vadavelesa tilem | do. | Rs. 4 |
| 902 | Ponnacany | oil do | Rs. 4. |

## Ginkaloo or Guns

903 Toommabunka.
904 Moolaga bunka.
905 Valogabunka or Wood apple.
906 Cuttemundoo.
907 Boorooga bunka.
908 Maumede bunka or Mango Gum.
909 Vapan bunka.
910 Rauve bunka.
911 Modooga bunka.
912 Jelooga bunka.

## Fibres.

913 Udda

914 Mogale
915 Aurete or plantain fibre.
916 Anasa or Thorn apple fibre.
917 Kitale
918 Janapa
919 Cutte
920 Coombhee.
921 Taute or Palmera fibre.
922 Benda.
923 Chavalee
924 Illadoo
925 Cauroobenda
926 Yerragogo
927 Murre
928 Sagamultala
929 Caroomerapa
930 Auranara
931 Cocanut fibre.
932 Elana or date fibre.
933 Chittee unkoodoo fibre
934 Bhadrashee
935 Lolooga
936 Doostoopoo
937 Ramapalapoo
938 Entrinta

SKINS OF ANIMALS.

939 Tiger's skin.
940 Leopard.
941 Bear.
942 Wooroodoopundy.
943 Hare.
944 Musk Cat or Bhootapilly.
945 Woodoom or Gauna.
946 Conda Yelka or Hillrat.
947 Woodataor Squirrel.
948 Doonmalagoondoo or Hyana.
949 Condalgarah or Shamoy.
950 Dooppee or Slag.

MEDICAL ROOTS.

951 Pilly Vandrum.
952 Yerrachitramoolum.
953 Thallachitramoolum.
954 Gulgaroo.
955 Soogundhee or Sarasaparilla.
956 Nulla Wooppy.
957 Thalla Wooppy.
958 Comununchee Valloo or roots.
959 Wild Indigo.
960 Aulatagada.
961 Buddoomoodee.
962 Vistnoo Cranita.
963 Nemale Chacka.
964 Pootta podara.
965 Thalla Eswara.
966 Patavaroo.
967 Nalla Vomum or Charcata root.
968 Thippativa.
969 Agneevondrum.
970 Bramaremauree root.
971 Pilly Tagaloo.
972 Audda sorum.
973 Vetr moongee.
974 Purpata cum.
975 Cusminda.
976 Thallagu Jaroo
977 Cauroopippaly.
978 Doostoopoo varoo.
979 Votti Valloo or Cuscus
980 Bremma made.
981 Vaulavadisa.
982 Challagoomoodoo.
983 Narramameedee.
984 Mooneegobbee.
985 Pedamoottoova poolgum.
986 Moolloovapoolgum.
987 Sahadavee.
988 Gutcha roots.
989 Pedda Vuncoodoo
990 Saimbranee or Benzoin.
991 Maula yerikita.
992 Nellachappita or grindhee Tigaram.
993 Auradoompa.
994 Thellagoolivinda.
995 Thella dintana.
996 Gauravaroo.
997 Chevoo Coovalaga.
998 Pala conesa.
999 Nulla dintana.
1000 Caurooingoova.
1001 Coolooroboodanie.
1002 Jerreaukoo roots.
1003 Gooddoo augankara.
1004 Yelakachaveeaukoo.
1005 Chachee bonda doomna.
1006 Godasoogundhee.
1007 Neelevempalee.
1008 Indooga.
1009 Thella Cacketa.
1010 Auravaroeor root.
1011 Peddagoomoodoo.
1012 Nelatadee.
1013 Pundeemootti doompa.
1014 Cauroopusoopoo.
1015 Carasa Aukoo.
1016 Cauroo aullum or wild ginger plant
1017 Pindee tagaloo.
1018 Bommacacheka doompa.
1019 Condajanoomoo.
1020 Naugagoloogoo.
1021 Paulagarooda.
1022 Gayapoo chacka.
1023 Vattoor chettoo or plant.
1024 English oats.
1025 Yevaloo.
1026 Teesee.
1027 Gasagasaloo.
1028 Coffee.
1029 Rice
1030 Cundooloo
1031 Conda cundee puppoo
1032 Common Condoloo
1033 Sanagaloo.
1034 Bodee Sanagooloo
1035 Sanagapuppoo
1036 Menapapuppoo
1037 Menoomooloo
1038 Teega menoomooloo
1039 Pasara puppoo
1040 Kutcha pasaloo
1041 Pilly Masaloo
1042 Teegapasaloo
1043 Thellajonnaloo
1044 Mockajannooloo

00080216

R.
~~R.C.32~~
016.6064
Off/Off.
80216
official x deposit Madras Exhibition of 1857.
1857
11/8/65 - 3 SEP 1966
GITIZED
2015 13 AUG 2015

Digitized with financial assistance from the
Government of Maharashtra
on 21 October, 2015